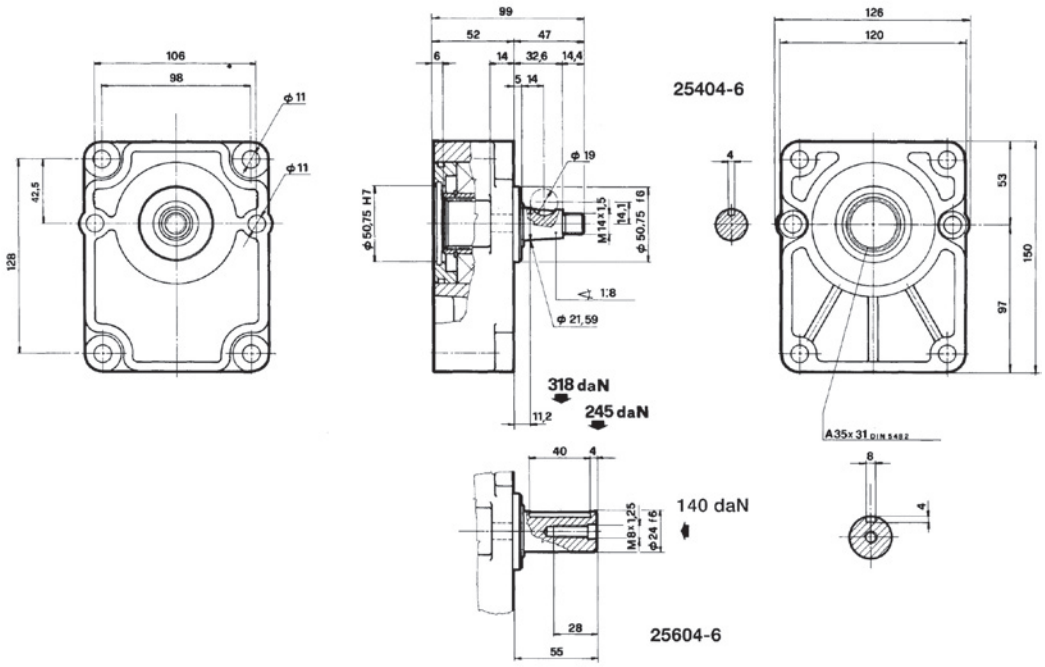GROUP 3 BEARING SUPPORT