ClarkDietrich BUILDING SYSTEMS
9100 Centre Pointe Dr. Suite 210
West Chester, OH 45069
Phone: (513) 870-9100

TradeReady® FLOOR DETAILS

Engineering Services: (877) 832-3206 Technical Services: (888) 437-3244

DRAWING: **F1118**

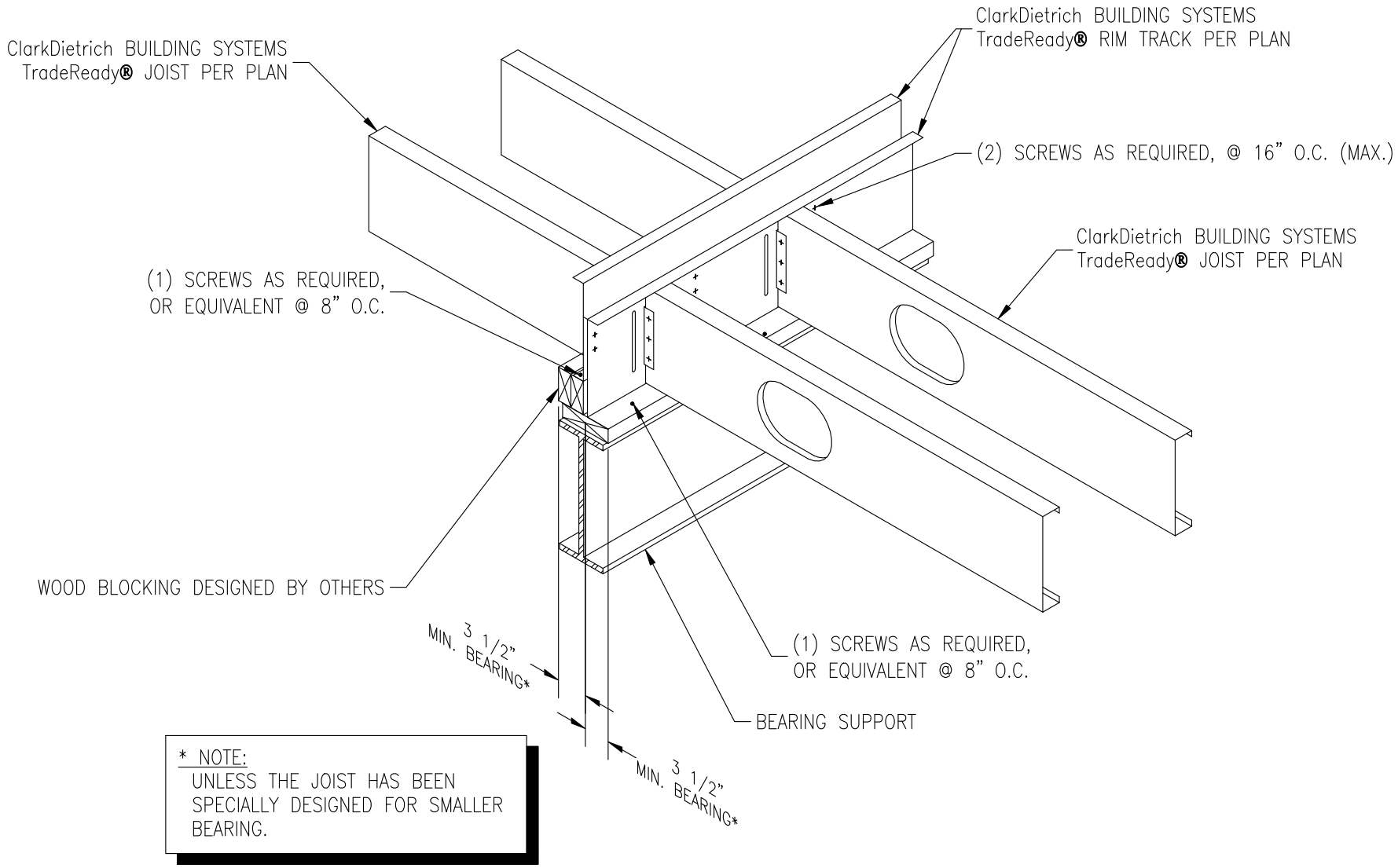

* NOTE:
UNLESS THE JOIST HAS BEEN SPECIALLY DESIGNED FOR SMALLER BEARING.

F1118

RAISED FLOOR CONDITION

ClarkDietrich TradeReady Floor Joist System

The CAD detail library is intended to provide general framing details only and does not replace the judgments and designs of a qualified architect and/or engineer. The details are provided as a starting tool to assist the user in creating and detailing cold-formed steel framing construction details. Each detail including accompanying text must be thoroughly evaluated and approved by a qualified architect or engineer. | Find over 500 CAD details at cad.clarkdietrich.com | © Copyright 2015 ClarkDietrich Building Systems