ClarkDietrich BUILDING SYSTEMS
9100 Centre Pointe Dr. Suite 210
West Chester, OH 45069
Phone: (513) 870-9100

TradeReady® FLOOR DETAILS

Engineering Services: (877) 832-3206 Technical Services: (888) 437-3244

DRAWING: **F1108**

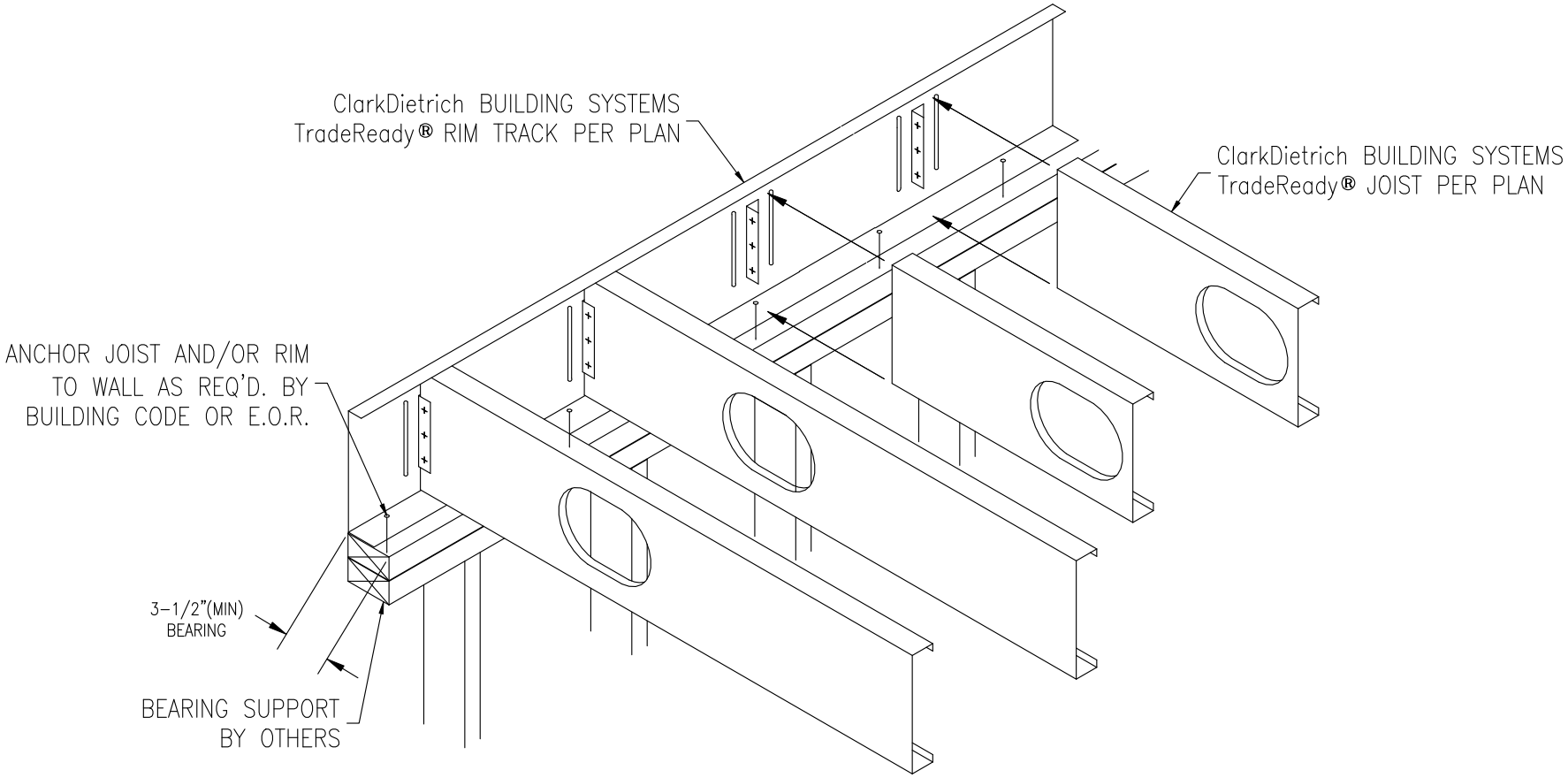

F1108 JOIST RIM – WOOD WALL – STANDARD

ClarkDietrich TradeReady Floor Joist System

The CAD detail library is intended to provide general framing details only and does not replace the judgments and designs of a qualified architect and/or engineer. The details are provided as a starting tool to assist the user in creating and detailing cold-formed steel framing construction details. Each detail including accompanying text must be thoroughly evaluated and approved by a qualified architect or engineer. | Find over 500 CAD details at cad.clarkdietrich.com | © Copyright 2015 ClarkDietrich Building Systems