Office de la Propriété Intellectuelle du Canada
Un organisme d'Industrie Canada

Canadian Intellectual Property Office
An agency of Industry Canada

CA 2705478 C 2016/05/24

(11)(21) **2 705 478**

(12) **BREVET CANADIEN**
CANADIAN PATENT

(13) **C**

(86) **Date de dépôt PCT/PCT Filing Date:** 2008/11/13
(87) **Date publication PCT/PCT Publication Date:** 2009/05/22
(45) **Date de délivrance/Issue Date:** 2016/05/24
(85) **Entrée phase nationale/National Entry:** 2010/05/12
(86) **N° demande PCT/PCT Application No.:** CA 2008/002002
(87) **N° publication PCT/PCT Publication No.:** 2009/062304
(30) **Priorités/Priorities:** 2007/11/13 (US60/987,672); 2008/04/22 (EP08154976.8); 2008/06/13 (US61/061,359); 2008/06/23 (US61/074,856); 2008/08/07 (US61/086,955); 2008/08/18 (US61/089,731)

(51) **Cl.Int./Int.Cl.** ***H04W 76/04*** (2009.01)

(72) **Inventeurs/Inventors:**
YOUNG, GORDON PETER, GB;
SUZUKI, TAKASHI, JP;
ARZELIER, CLAUDE, GB;
ISLAM, MUHAMMAD KHALEDUL, CA;
WIRTANEN, JEFFREY WILLIAM, CA

(73) **Propriétaire/Owner:**
BLACKBERRY LIMITED, CA

(74) **Agent:** MOFFAT & CO.

(54) **Titre : PROCEDE ET APPAREIL DE PASSAGE ENTRE DES ETATS OU DES MODES DE FONCTIONNEMENT**
(54) **Title: METHOD AND APPARATUS FOR STATE/MODE TRANSITIONING**

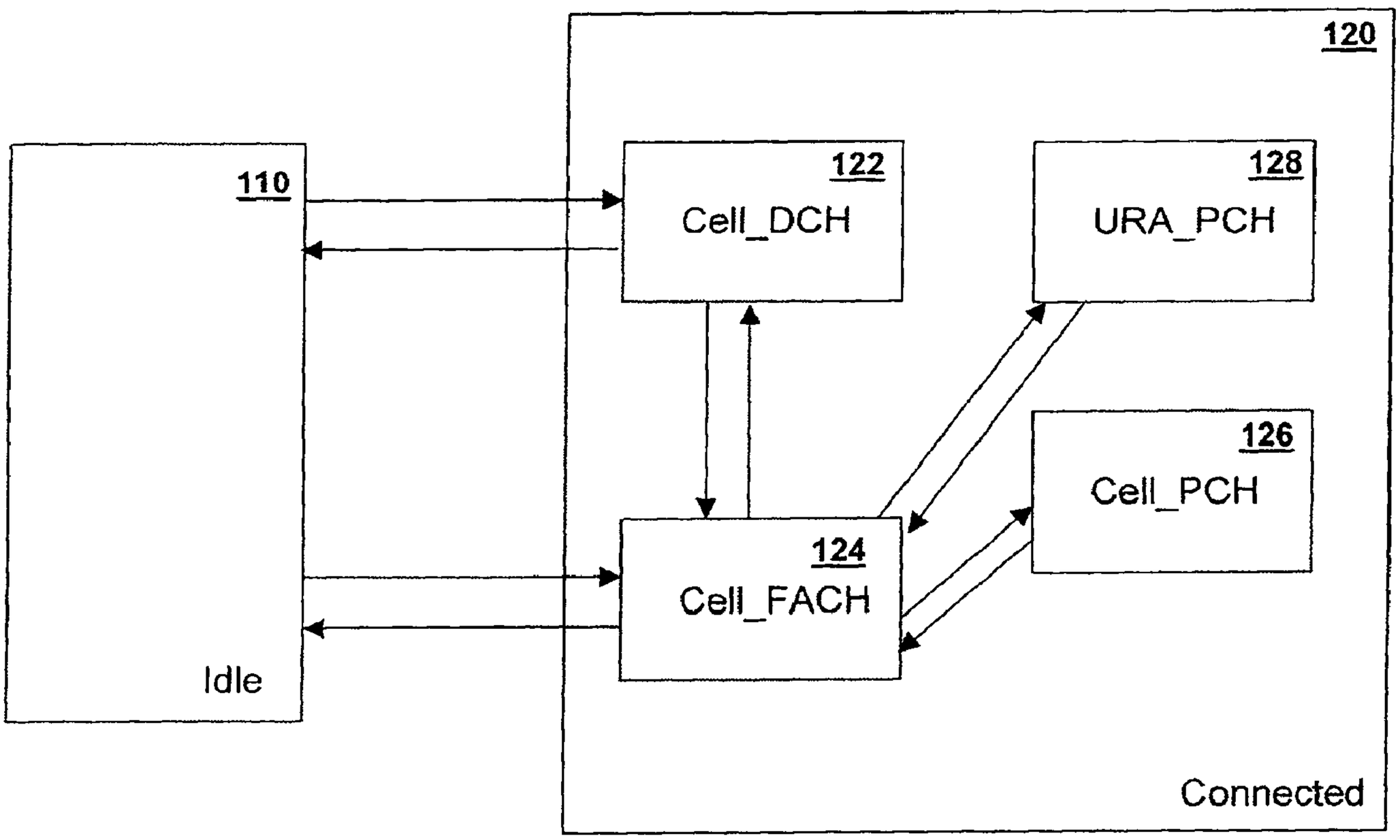

(57) **Abrégé/Abstract:**
A method and network element for sending a transition indication to transition a user equipment to a different state or mode, the method receiving a configuration message from a network; and transmitting a transition indication from the user equipment, the transition indication only includes a cause if the configuration message contains an inhibit transition indication. Also, a method and user equipment for processing a transitioning indication from a user equipment indicating the user equipment desires a transition to a different state or mode, the method comprising: receiving the transition indication from the user equipment; if the transition indication contains a cause: releasing a signaling connection of the user equipment or transitioning the user equipment to a different state or mode; and if the transition indication does not contain the cause: releasing the signaling connection.

ABSTRACT

A method and network element for sending a transition indication to transition a user equipment to a different state or mode, the method receiving a configuration message from a network; and transmitting a transition indication from the user equipment, the transition indication only includes a cause if the configuration message contains an inhibit transition indication. Also, a method and user equipment for processing a transitioning indication from a user equipment indicating the user equipment desires a transition to a different state or mode, the method comprising: receiving the transition indication from the user equipment; if the transition indication contains a cause: releasing a signaling connection of the user equipment or transitioning the user equipment to a different state or mode; and if the transition indication does not contain the cause: releasing the signaling connection.

METHOD AND APPARATUS FOR STATE/MODE TRANSITIONING

FIELD OF THE DISCLOSURE

[0001] The present disclosure relates to radio resource control between User Equipment (UE) or other wireless or mobile device and a wireless network, and in particular to transitioning between states and modes of operation in a wireless network such as for example, a Universal Mobile Telecommunication System (UMTS) network.

BACKGROUND

[0002] A Universal Mobile Telecommunication System (UMTS) is a broadband, packet based system for the transmission of text, digitized voice, video and multi-media. It is a highly subscribed to standard for third generation and is generally based on Wideband Coded Division Multiple Access (W-CDMA).

[0003] In a UMTS network, a Radio Resource Control (RRC) part of the protocol stack is responsible for the assignment, configuration and release of radio resources between the UE and the UTRAN. This RRC protocol is described in detail in the 3GPP TS 25.331 specifications. Two basic modes that the UE can be in are defined as "idle mode" and "UTRA RRC connected mode" (or simply "connected mode", as used herein). UTRA stands for UMTS Terrestrial Radio Access. In idle mode, the UE or other mobile device is required to request a RRC connection whenever it wants to send any user data or in response to a page whenever the UTRAN or the Serving General Packet Radio Service (GPRS) Support Node (SGSN) pages it to receive data from an external data network such as a push server. Idle and Connected mode behaviors are described in detail in the Third Generation Partnership Project (3GPP) specifications TS 25.304 and TS 25.331.

[0004] When in a UTRA RRC connected mode, the device can be in one of four states. These are:

CELL-DCH: A dedicated channel is allocated to the UE in uplink and downlink in this state to exchange data. The UE must perform actions as outlined in 3GPP 25.331.

CELL_FACH: no dedicated channel is allocated to the user equipment in this state. Instead, common channels are used to exchange a small amount of bursty data. The UE must perform actions as outlined in 3GPP 25.331 which includes the cell selection process as defined in 3GPP TS 25.304.

CELL_PCH: the UE uses Discontinuous Reception (DRX) to monitor broadcast messages and pages via a Paging Indicator Channel (PICH). No uplink activity is possible. The UE must perform actions as outlined in 3GPP 25.331 which includes the cell selection process as defined in 3GPP TS 25.304. The UE must perform the CELL UPDATE procedure after cell reselection.

URA_PCH: the UE uses Discontinuous Reception (DRX) to monitor broadcast messages and pages via a Paging Indicator Channel (PICH). No uplink activity is possible. The UE must perform actions as outlined in 3GPP 25.331 including the cell selection process as defined in 3GPP TS 25.304. This state is similar to CELL_PCH, except that URA UPDATE procedure is only triggered via UTRAN Registration Area (URA) reselection.

[0005] The transition from an idle mode to the connected mode and vise-versa is controlled by the UTRAN. When an idle mode UE requests an RRC connection, the network decides whether to move the UE to the CELL_DCH or CELL_FACH state. When the UE is in an RRC connected mode, again it is the network that decides when to release the RRC connection. The network may also move the UE from one RRC state to another prior to releasing the connection or in some cases instead of releasing the connection. The state transitions are typically triggered by data activity or inactivity between the UE and network. Since the network may not know when the UE has completed the data exchange for a given application, it typically keeps the RRC connection for some time in anticipation of more data to/from the UE. This is typically done to reduce the latency of call set-up and subsequent radio resource setup. The RRC connection release message can only be sent by the UTRAN. This message releases the signal link connection and all radio resources between the UE and the UTRAN. Generally, the term "radio bearer" refers to radio resources assigned between the UE and the UTRAN. And, the term "radio access bearer" generally refers to radio resources assigned between the UE and, e.g., an SGSN (Serving GPRS Service Node). The present disclosure shall, at times, refer to the term radio resource, and such term shall refer, as appropriate, to either or both the radio bearer and/or the radio access bearer.

[0006] The problem with the above is that even if an application on the UE has completed its data transaction and is not expecting any further data exchange, it still waits for the network to move it to the correct state. The network may not be even aware of the fact that the application on the UE has completed its data exchange. For example, an application on the UE may use its own acknowledgement-based protocol to exchange data with its application server, which is accessed through the UMTS core network. Examples are applications that run over User Datagram Protocol/Internet Protocol (UDP/IP) implementing their own guaranteed delivery. In such a case, the UE knows whether the application server has sent or received all the data packets or not and is in a better position to determine if any further data exchange is to take place and hence decide when to terminate the RRC connection associated with Packet Service (PS) domain. Since the UTRAN controls when the RRC connected state is changed to a different state or into an idle mode and the UTRAN is not aware of the status of data delivery between the UE and external server, the UE may be forced to stay in a higher data rate state or mode than what is required, possibly resulting in decreased battery life for the mobile station and also possibly resulting in wasted network resources due to the fact that the radio resources are unnecessarily being kept occupied and are thus not available for another user.

[0007] One solution to the above is to have the UE send a signaling release indication to the UTRAN when the UE realizes that it is finished with a data transaction. Pursuant to section 8.1.14.3 of the 3GPP TS 25.331 specification, the UTRAN may release the signaling connection upon receipt of the signaling release indication from the UE, causing the UE to transition to an idle mode or some other RRC state. A problem with the above solution is that the UTRAN might become inundated with signaling release indication messages from the UE and other UEs

SUMMARY

[0008] The examples and embodiments provided below describe various methods and systems for transitioning a User Equipment (UE) or other mobile device between various states/modes of operation in a wireless network such as, for example, a UMTS network. It is to be understood that other implementations in

other types of networks are also possible. For example, the same teachings could also be applied to a Code-Division-Multiple-Access (CDMA) network (e.g. 3GPP2 IS-2000), Wideband-CDMA (W-CDMA) network (e.g. 3GPP UMTS / High-Speed Packet Access (HSPA)) network, an Evolved UTRAN network (e.g. LTE), or by way of generalization, to any network based on radio access technologies that utilize network-controlled radio resources or that does not maintain any knowledge of the status of device application level data exchanges. The specific examples and implementations described below although presented for simplicity in relation to UMTS networks are also applicable to these other network environments. Further, the network element is sometimes described below as the UTRAN. However, if other network types besides UMTS are utilized, the network element can be selected appropriately based on the network type. Further, the network element can be the core network in a UMTS system or any other appropriate network system, where the network element is the entity that makes transition decisions.

[0009] In a particular example, the present system and method provide for the transitioning from an RRC connected mode to a more battery efficient or radio resource efficient state or mode while providing for decision making capabilities at the network. In particular, the present method and apparatus provide for transitioning based on receipt of an indication from a UE indicating, either implicitly or explicitly, that a transition of the RRC state or mode associated with a particular signaling connection with radio resources to another state or mode should occur. As will be appreciated, such a transition indication or request could utilize an existing communication under current standards, for example a SIGNALING CONNECTION RELEASE INDICATION message, or could be a new dedicated message to change the state of the UE, such as a "preferred RRC state request" or a "data transfer complete indication message". A data transfer complete indication message is a message which indicates the completion of higher layer data transfer. As used herein, an indication could refer to either scenario, and could incorporate a request.

[0010] The transition indication originated by the UE can be sent in some situations when one or more applications on the UE have completed an exchange of data and/or when a determination is made that the UE application(s) are not expected to exchange any further data. The network element can then use the indication and any information provided therein, as well as other information related to the radio resource, such a quality of service, Access Point Name (APN), Packet Data Protocol (PDP) context, historical information, among others, defined herein as

a radio resource profile, to make a network specific decision about whether to transition the mobile device to another mode or state, or do nothing. The transition indication provided by the UE or mobile device can take several forms and can be sent under different conditions. In a first example, the transition indication can be sent based on a composite status of all of the applications residing on the UE. Specifically, in a UMTS environment, if an application on the UE determines that it is done with the exchange of data, it can send a "done" indication to a "connection manager" component of UE software. The connection manager can, in one embodiment, keep track of all existing applications (including those providing a service over one or multiple protocols), associated Packet Data Protocol (PDP) contexts, associated packet switched (PS) radio resources and associated circuit switched (CS) radio resources. A PDP Context is a logical association between a UE and PDN (Public Data Network) running across a UMTS core network. One or multiple applications (e.g. an e-mail application and a browser application) on the UE may be associated with one PDP context. In some cases, one application on the UE is associated with one primary PDP context and multiple applications may be tied with secondary PDP contexts. The Connection Manager receives "done" indications from different applications on the UE that are simultaneously active. For example, a user may receive an e-mail from a push server while browsing the web. After the e-mail application has sent an acknowledgment, it may indicate that it has completed its data transaction. The browser application may behave differently and instead make a predictive determination (for e.g. using an inactivity timer) of when to send a "done" indication to the connection manager.

[0011] Based on a composite status of such indications from active applications, UE software can decide to send a transition indication to indicate or request of the network that a transition from one state or mode to another should occur. Alternatively, the UE software can instead wait before it sends the transition indication and introduce a delay to ensure that the application is truly finished with data exchange and does not require to be maintained in a battery or radio resource intensive state or mode. The delay can be dynamic based on traffic history and/or application profiles. Whenever the connection manager determines with some probability that no application is expected to exchange data, it can send a transition indication to the network to indicate that a transition should occur. In a specific example, the transition indication can be a signaling connection release indication for the appropriate domain (e.g. PS domain) to request a transition to an idle mode.

Alternatively, the transition indication could be a request for state transition within connected mode to the UTRAN.

[0012] As described below in further detail, based on the receipt of a transition indication and optionally a radio resource profile, a network element such as the UTRAN in a UMTS environment can decide to transition the UE from one state or mode to another.

[0013] Other transition indications are possible. For example, instead of relying on a composite status of all active applications on the UE, the UE software can, in an alternative embodiment, send a transition indication every time a UE application has completed an exchange or data and/or the application is not expected to exchange further data. In this case, the network element (e.g. the UTRAN), based on an optional radio resource profile for the UE as described with reference to **Figure 18** below, can utilize the indication to make a transitioning decision.

[0014] In yet another example, the transition indication could simply indicate that one or more applications on the UE completed a data exchange and/or that the UE application(s) are not expected to exchange any further data. Based on that indication and an optional radio resource profile for the UE, the network (e.g. UTRAN), can decide whether or not to transition the UE to a more appropriate state or mode or operation.

[0015] In a further example, the transition indication could be implicit rather than explicit. For example, the indication may be part of a status report sent periodically. Such a status report could include information such as whether a radio link buffer has data or could include information on outbound traffic.

[0016] When the UE sends a transition indication it may include additional information in order to assist the network element in making a decision to act on the indication. This additional information would include the reason or cause for the UE to send the message. This cause or reason (explained below in greater detail) would be based on the UE determining a need for "fast dormancy" like behavior. Such additional information may be by way of a new information element or a new parameter within the transition indication message.

[0017] In a further embodiment, a timer could exist on the UE to ensure that a transition indication may not be sent until a time duration has elapsed (inhibit duration) since a previous transition indication was sent. This inhibit timer restricts the UE from sending the transition indication message too frequently and further allows the network to make a determination by relying on messages that are triggered only with a given maximum frequency. The time duration could be determined by a timer whose value is preconfigured, or set by a network (indicated or signaled). If the value is set by a network, it could be conveyed in new or existing messages such as RRC Connection Request, RRC Connection release, Radio Bearer Setup, UTRAN Mobility Information or a System Information Block, among others, and could be an information element in those messages. The value could alternatively be conveyed in an inhibit transition indication portion of an RRC connection setup message sent by the UTRAN in response to an RRC connection request message received from the UE, for example.

[0018] In an alternative embodiment, the value could be conveyed to a UE in a message whose type depends on a state of the UE. For example, the network could send the value to all the UEs in a cell as a portion of a system information message which is read by the UE when it is in an IDLE, URA_PCH, Cell_PCH or CELL_FACH state.

[0019] In yet another embodiment, the value could be sent as a portion of an RRC connection setup message.

[0020] Network generated messages may also convey an implied inhibit timer value through non-inclusion of an inhibit timer in the message or in an information element within the message. For example, upon determining that an inhibit timer is omitted from a received message, a UE applies a pre-determined value for use as an inhibit timer value. One exemplary use of inhibit timer value omission is to prohibit the UE from sending a transition indication message. In such a situation, when a UE detects the omission of an expected inhibit timer value in a received message, the UE may, based on the omission, be prohibited from sending any transition indication messages. One way to achieve this is for the UE to adopt an inhibit timer value of infinity.

[0021] In another embodiment when the UE detects the omission of an inhibit timer value (and for example, adopts an inhibit timer value of infinity), it may send

transition indications but without including any additional information, specifically it may omit the cause for triggering the sending of the transition indication (further described below in greater detail). The omission of a cause element in a transition indication message may ensure backward-compatibility by allowing UEs to use an existing transition indication message (e.g. SIGNALING CONNECTION RELEASE INDICATION) to request or indicate a transition.

[0022] Non-inclusion of an inhibit timer in the received message is further detailed with reference to an exemplary embodiment wherein a System Information Block is broadcast in a cell, or sent to a UE and the System Information Block is configured to convey an inhibit timer value. In this embodiment, if the UE receives a System Information Block which does not contain an inhibit timer, known as T3xx, in the message or an information element within the message, in which case the UE may determine to not enable the UE to send the transition indication message, for example by setting the inhibit timer, T3xx, to infinity.

[0023] Non-inclusion of an inhibit timer is further detailed with reference to another exemplary embodiment wherein an inhibit timer, T3xx, is omitted from a UTRAN Mobility Information message. In such a situation a recipient UE may continue to apply a previous stored inhibit timer value. Alternatively, the UE, on detecting the omission of the inhibit timer T3xx, may determine to not enable the UE to send the transition indication message, for example by setting the inhibit timer, T3xx, to infinity.

[0024] In yet another exemplary embodiment, a UE, on detecting the omission of an inhibit timer in the received message or in an information element within the message, sets the inhibit timer value to another preset value (e.g. one of 0 seconds, 5 seconds, 10 seconds, 15 seconds, 20 seconds, 30 seconds, 1 minute, 1 minute 30 seconds, 2 minutes). Alternatively or in addition, these examples may apply to other network generated messages.

[0025] In other embodiments, if the inhibit timer (value) is not sent or signaled to the UE in a message or information element, or the inhibit timer is not read from broadcast system information or received from other dedicated UTRAN messages on transitioning from one cell to another, the sending of a transition indication may or may not occur.

[0026] Specifically in one embodiment the UE on detecting that there is no inhibit timer present, does not initiate a transition indication based on a higher layer determining that it has no more PS data to transmit.

[0027] In an alternative embodiment the UE on detecting that there is no inhibit timer present, may initiate a transition indication based on the higher layer determining that it has no more PS data to transmit.

[0028] In yet another embodiment, if no timer value is received from the UTRAN within a message, or within an information element in a message (via broadcasting or otherwise), rather than setting the timer value at the UE to infinity the UE may set the inhibit timer to zero or alternatively delete any configuration for the timer, and instead be permitted to send a transition indication. In this case, the UE could omit or be prohibited from attaching a cause in the transition indication message. In one embodiment a SIGNALING CONNECTION RELEASE INDICATION message is used as one example of a transition indication.

[0029] In an embodiment the transition indication is conveyed using the signaling connection release indication procedure. The signaling connection release indication procedure is used by the UE to indicate to the UTRAN that one of its signaling connections has been released.

[0030] Specifically in accordance with TS 25.331 Section 8.1.14.2 the UE shall, on receiving a request to release the signaling connection from the upper layers for a specific CN domain, check if the signaling connection in the variable "ESTABLISHED _SIGNALLING _CONNECTIONS for the specific CN domain identified in the information element "CN domain identity" exists. If it does, the UE may initiate the signaling connection release indication procedure.

[0031] In the case of the inhibit timer value not being signaled or otherwise conveyed to the UE, no signaling connection release indication cause is specified in the SIGNALING CONNECTION RELEASE INDICATION message. Those skilled in the art will appreciate that in this alternative embodiment the lack of a timer value does not result in the timer value being set to infinity.

[0032] On the UTRAN side, upon receipt of a SIGNALING CONNECTION RELEASE INDICATION message without a cause, the UTRAN indicates the release

of the signaling connection for the identified CN domain identity to the upper layers. This may then initiate the release of the established radio resource control connection.

[0033] Under another alternative embodiment, when the UTRAN signals or conveys a timer value to the UE, for example, inhibit timer T3xx in information element "UE timers and constants in connected mode" (or using system information, such as SIB1, SIB3 or SIB4, or with a dedicated UTRAN mobility information message), the release procedure occurs in accordance with the following. First, the UE can check whether there are any circuit switched domain connections indicated. Such connections may be indicated in the variable "ESTABLISHED_-SIGNALLING_CONNECTIONS". If there are no circuit switched domain connections, a second check to determine whether an upper layer indicates that there will be no packet switched domain data for a prolonged period could occur.

[0034] If there are no circuit switched domain connections and no packet switched domain data is expected for a prolonged period, the UE may next check whether the timer T3xx is running.

[0035] If the timer T3xx is not running, the UE sets information element "CN Domain Identity" to the packet switched (PS) domain. Further, the information element "Signaling Connection Release Indication Cause" is set to "UE requested PS data session end". The SIGNALING CONNECTION RELEASE INDICATION message is transmitted on the DCCH using AM RLC. Further, after the transmission the timer T3xx is started.

[0036] The procedure above ends on successful delivery of the SIGNALING CONNECTION RELEASE INDICATION message, as confirmed by the RLC in the above procedure. In this embodiment, the UE is inhibited from sending the SIGNALING CONNECTION RELEASE INDICATION message with a signaling connection release indication cause set to "UE Requested PS data session end" while the timer T3xx is running or until the timer T3xx has expired.

[0037] When the T3xx timer is running, if the signaling connection release indication procedure is initiated due to no further packet switched domain data for a prolonged duration, the UE is responsible for implementing whether to initiate the procedure on the expiry of the T3xx timer. The UE decision may be based on

determining whether it has any subsequent signaling connection release indication or request messages to send and if so, the UE decision may include re-checking some or all of the same checks for initiating the procedure as outlined herein.

[0038] On the UTRAN side, if the SIGNALING CONNECTION RELEASE INDICATION message received does not include a signaling connection release indication cause, the UTRAN may request the release of the signaling connection from an upper layer and the upper layer may then initiate the release of the signaling connection. If on the other hand the SIGNALING CONNECTION RELEASE INDICATION message received includes a cause, the UTRAN may either release the signaling connection or initiate a state transition to a more battery efficient state (e.g CELL_FACH, CELL_PCH , URA_PCH or IDLE_MODE).

[0039] The inhibit duration above may be based on the state the UE would like to transition to. For example the inhibit duration may be different, whether the mobile indicated its last preference for some RRC States/modes versus others. For example, it could be different if the mobile indicated a preference for idle mode, versus Cell_FACH, or versus Cell_PCH/URA PCH States. In the case where the Inhibit Duration is set by the network, this may be achieved by the network indicating/sending two (or more) sets of values to the mobile, to be used depending on the scenario. Alternatively, the indication could be done in such a way that the appropriate Inhibit duration value only is indicated/signaled to the mobile: for example, if the UE wants to transition to Cell_PCH, a different elapsed time duration could be set than if the UE wants to transition to Idle.

[0040] The inhibit duration from above may be different, depending on which RRC State/mode the mobile currently is in (e.g. Cell_DCH/Cell_FACH versus Cell_PCH/URA_PCH, or in Cell_DCH versus Cell_FACH, or Cell_PCH/URA_PCH).

[0041] The inhibit duration from above may be different, depending if the network has already acted on preference RRC State information from the mobile. Such recognition may be happen on the network, or on the mobile side. In the first case, this may affect the Inhibit values indicated/signaled by the network to the mobile. In this second case, different sets of Inhibit duration values may be preconfigured or indicated/signaled by the network. As a particular case, the inhibit duration/functionality may be reduced or cancelled if the network has acted on

preference RRC State information from the mobile, e.g. has initiated a state transition to a state indicated by the UE.

[0042] The inhibit duration from above may be different, depending on, for example, preferences, features, capabilities, loads or capacities of the network. A network may indicate a short inhibit duration if it is able to receive frequent transition indication messages. A network may indicate a long inhibit duration if it is unable or does not want to receive frequent transition indication messages. A network may indicate a specific period of time during which a UE cannot send transition indication messages. The specific period of time can be indicated numerically (i.e. 0 seconds, 30 seconds, 1 minute, 1 minute 30 seconds, 2 minutes or infinity) for example. A UE which receives an inhibit duration of 0 seconds is able to send transition indications without delay. A UE which receives an inhibit duration of infinity is unable to send transition indications.

[0043] A maximum number of messages per time-window (e.g. "no more than 15 messages every 10 minutes") may be used/specified instead of, or in addition to, the Inhibit duration.

[0044] Combinations of the above inhibition durations/maximum messages per time-window are possible.

[0045] By way of example, the present disclosure generally describes the reception of an RRC CONNECTION REQUEST message by a UTRAN from a UE. Upon receiving an RRC CONNECTION REQUEST message, the UTRAN should, for example, accept the request and send an RRC CONNECTION SETUP message to the UE. The RRC CONNECTION SETUP message may include an Inhibit Transition Indication, which is known as Timer T3xx. Upon reception of the RRC CONNECTION SETUP message by the UE, the UE should, for example, store the value of the Timer T3xx, replacing any previously stored value, or, if the Timer T3xx is not in the RRC CONNECTION SETUP message, set the value of the timer to infinity. In some embodiments, the RRC CONNECTION SETUP message must include an Inhibit Transition Indication to ensure that the UE knows that the UTRAN supports the Inhibit Transition Indication signaling.

[0046] In an embodiment it is assumed that during mobility in a DCH state, the UE will maintain its currently stored value for the inhibit timer. In some cases where

the inhibit timer is set to infinity this may mean that the UE must wait for network data inactivity timers to expire and for the network to move the UE to an RRC state where it can receive or determine a new value for the inhibit timer. In other cases where the inhibit timer is some value other than infinity before the handover, this other value is continued to be used until the UE is able to update the timer value to that indicated in the new cell.

[0047] In some instances the inhibit timer and the transition indication (e.g. SIGNALING CONNECTION RELEASE INDICATION) message may not be implemented in some networks or in some cells within a network. For mobility purposes, if there is no support available for the feature of sending a transition indication or request message (particularly in the case where a cause is used), the UE should default to not sending the message. This avoids unnecessary transmissions and the associated waste of network resources and battery resources.

[0048] In addition, for mobility purposes, different vendor's network equipment used within a network may lead to adjacent cells using different inhibit timers which need to be updated on the UE when the UE moves between cells.

[0049] In one alternative embodiment this is handled by providing that all handover and related bearer control messages include a value for an inhibit timer T3xx. Such messages are referred to herein as mobility messages. This allows the UE to receive new inhibit timer values when moving between cells. It also allows the UE to set a default timer value for the inhibit timer if one of these mobility messages does not contain an inhibit timer value. As will be appreciated, if no inhibit timer value is received in the mobility messages, this indicates that the cell is not enabled for fast dormancy.

[0050] As another example of a transition indication procedure, a Data Transfer Complete Indication procedure may be used by the UE to indicate to the UTRAN that it has determined that it does not need to transfer any more PS domain data. In connection with the example described above, the UE would not send the Data Transfer Complete Indication message before the timer T3xx has expired, if the timer T3xx was running.

[0051] The Data Transfer Complete Indication procedure commences with an indication that the RRC or upper layers will have no more PS domain data for a

prolonged duration. If a CS domain connection is indicated in the variable ESTABLISHED_SIGNALLING_CONNECTIONS or if timer T3xx is set to infinity the procedure ends. Otherwise if timer T3xx is not running (i.e. has expired) or is set to 0 seconds, a DATA TRANSFER COMPLETE INDICATION message is submitted to the lower layers for transmission using AM RLC on DCCH after which the timer T3xx is started or reset when the message has been delivered to the lower layers;

[0052] The UTRAN on receipt of the DATA TRANSFER COMPLETE INDICATION may decide to initiate a UE transition to a more battery efficient RRC state or idle mode.

[0053] The UE shall not send the Data Transfer Complete Indication message while timer T3xx is running.

[0054] The present disclosure therefore provides a method for sending a transition indication to transition a user equipment to a different state or mode, the method comprising: receiving a configuration message from a network; and transmitting a transition indication from the user equipment, the transition indication only includes a cause if the configuration message contains an inhibit transition indication.

[0055] The present disclosure also provides a user equipment configured to send a transition indication to transition to a different state or mode, the user equipment configured to: receive a configuration message from a network; and transmit a transition indication from the user equipment, the transition indication only includes a cause if the configuration message contains an inhibit transition indication.

[0056] The present disclosure further provides a method for processing a transitioning indication from a user equipment indicating the user equipment desires a transition to a different state or mode, the method comprising: receiving the transition indication from the user equipment; if the transition indication contains a cause: releasing a signaling connection of the user equipment or transitioning the user equipment to a different state or mode; and if the transition indication does not contain the cause: releasing the signaling connection.

[0057] The present disclosure further provides a network element configured to transition a state or mode of a user equipment, the network equipment configured to:

receive the transition indication from the user equipment; if the transition indication contains a cause: release a signaling connection of the user equipment or transitioning the user equipment to a different state or mode; and if the transition indication does not contain the cause: release the signaling connection

BRIEF DESCRIPTION OF THE DRAWINGS

[0058] The present disclosure will be better understood with reference to the drawings in which:

Figure 1 is a block diagram showing RRC states and transitions;

Figure 2 is a schematic of a UMTS network showing various UMTS cells and a URA;

Figure 3 is a block diagram showing the various stages in an RRC connection setup;

Figure 4A is a block diagram of an exemplary transition between a CELL_DCH connected mode state and an idle mode initiated by the UTRAN according to current method;

Figure 4B is a block diagram showing an exemplary transition between a CELL_DCH state connected mode transition to an idle mode utilizing signaling release indications;

Figure 5A is a block diagram of an exemplary transition between a CELL_DCH inactivity state to a CELL_FACH inactivity state to an idle mode initiated by the UTRAN;

Figure 5B is a block diagram of an exemplary transition between CELL_DCH inactivity state and an idle mode utilizing signaling release indications;

Figure 6 is a block diagram of a UMTS protocol stack;

Figure 7 is an exemplary UE that can be used in association with the present method;

Figure 8 is an exemplary network for use in association with the present method and system;

Figure 9 is a flow diagram showing the steps of adding a cause for a signaling connection release indication at the UE;

Figure 10 is a flow diagram showing the steps taken by a UE upon receipt of a signaling connection release indication having a cause;

Figure 11 illustrates a graphical representation of exemplary logical and physical channel allocation during exemplary operation of the network shown in

Figure 8 in which multiple, concurrent packet data communication service sessions are provided with the UE;

Figure 12 illustrates a functional block diagram of UE and network elements that provide for radio resource release function to release radio resources of individual packet data services pursuant to an embodiment of the present disclosure;

Figure 13 illustrates a message sequence diagram representative of signaling generated pursuant to operation of an embodiment of the present disclosure by which to release radio resource allocation to a PDP context;

Figure 14 illustrates a message sequence diagram, similar to that shown in **Figure 13**, also representative of signaling generated pursuant to operation of an embodiment of the present disclosure by which to release radio resource allocation;

Figure 15 illustrates a process diagram representative of the process of an embodiment of the present disclosure;

Figure 16 illustrates a method flow diagram illustrating the method of operation of an embodiment of the present disclosure;

Figure 17 illustrates a method flow diagram, also illustrating the method of operation of an embodiment of the present disclosure;

Figure 18 illustrates a method flow diagram of an embodiment in which transitioning decisions are made based on a Radio Resource Profile at a network element;

Figure 19 illustrates a simplified block diagram of a network element capable of being used with the method of **Figure 18**;

Figure 20 illustrates a data flow diagram for the sending of a transition indication or request message; and

Figure 21 illustrates a data flow diagram for setting an inhibit timer value at a UE.

DETAILED DESCRIPTION

[0059] Reference is now made to **Figure 1**. **Figure 1** is a block diagram showing the various modes and states for the radio resource control portion of a protocol stack in a UMTS network. In particular, the RRC can be either in an RRC idle mode **110** or an RRC connected mode **120**.

[0060] As will be appreciated by those skilled in the art, a UMTS network consists of two land-based network segments. These are the Core Network (CN) and the Universal Terrestrial Radio-Access Network (UTRAN) (as illustrated in

Figure 8). The Core Network is responsible for the switching and routing of data calls and data connections to the external networks while the UTRAN handles all radio related functionalities.

[0061] In idle mode **110**, the UE must request an RRC connection to set up the radio resource whenever data needs to be exchanged between the UE and the network. This can be as a result of either an application on the UE requiring a connection to send data, or as a result of the UE monitoring a paging channel to indicate whether the UTRAN or SGSN has paged the UE to receive data from an external data network such as a push server. In addition, the UE also requests an RRC connection whenever it needs to send Mobility Management signaling messages such as Location Area Update.

[0062] Once the UE has sent a request to the UTRAN to establish a radio connection, the UTRAN chooses a state for the RRC connection to be in. Specifically, the RRC connected mode **120** includes four separate states. These are CELL_DCH state **122**, CELL_FACH state **124**, CELL_PCH state **126** and URA_PCH state **128**.

[0063] From idle mode **110** the UE autonomously transitions to the CELL_FACH state **124**, in which it makes its initial data transfer, subsequent to which the network determines which RRC connected state to use for continued data transfer. This may include the network either moving the UE into the Cell Dedicated Channel (CELL_DCH) state **122** or keeping the UE in the Cell Forward Access Channel (CELL_FACH) state **124**.

[0064] In CELL_DCH state **122**, a dedicated channel is allocated to the UE for both uplink and downlink to exchange data. This state, since it has a dedicated physical channel allocated to the UE, typically requires the most battery power from the UE.

[0065] Alternatively, the UTRAN can maintain the UE in a CELL_FACH state **124**. In a CELL_FACH state no dedicated channel is allocated to the UE. Instead, common channels are used to send signaling in a small amount of bursty data. However, the UE still has to continuously monitor the FACH, and therefore it consumes more battery power than in a CELL_PCH state, a URA_PCH state, and in idle mode.

[0066] Within the RRC connected mode **120,** the RRC state can be changed at the discretion of the UTRAN. Specifically, if data inactivity is detected for a specific amount of time or data throughput below a certain threshold is detected, the UTRAN may move the RRC state from CELL_DCH state **122** to the CELL_FACH state **124,** CELL_PCH state **126** or URA_PCH state **128**. Similarly, if the payload is detected to be above a certain threshold then the RRC state can be moved from CELL_FACH state **124** to CELL_DCH state **122**.

[0067] From CELL_FACH state **124**, if data inactivity is detected for a predetermined time in some networks, the UTRAN can move the RRC state from CELL_FACH state **124** to a paging channel (PCH) state. This can be either the CELL_PCH state **126** or URA_PCH state **128**.

[0068] From CELL_PCH state **126** or URA_PCH state **128** the UE must move to CELL_FACH state **124** in order to initiate an update procedure to request a dedicated channel. This is the only state transition that the UE controls.

[0069] Idle mode **110** and CELL_PCH state **126** and URA_PCH state **128** use a discontinuous reception cycle (DRX) to monitor broadcast messages and pages by a Paging Indicator Channel (PICH). No uplink activity is possible.

[0070] The difference between CELL_PCH state **126** and URA_PCH state **128** is that the URA_PCH state **128** only triggers a URA Update procedure if the UE's current UTRAN registration area (URA) is not among the list of URA identities present in the current cell. Specifically, reference is made to **Figure 2**. **Figure 2** shows an illustration of various UMTS cells **210**, **212** and **214**. All of these cells require a cell update procedure if reselected to a CELL_PCH state. However, in a UTRAN registration area, each will be within the same UTRAN registration area (URA) **320**, and thus a URA update procedure is not triggered when moving between **210**, **212** and **214** when in a URA_PCH mode.

[0071] As seen in **Figure 2**, other cells **218** are outside the URA **320**, and can be part of a separate URA or no URA.

[0072] As will be appreciated by those skilled in the art, from a battery life perspective the idle state provides the lowest battery usage compared with the states

above. Specifically, because the UE is required to monitor the paging channel only at intervals, the radio does not need to continuously be on, but will instead wake up periodically. The trade-off for this is the latency to send data. However, if this latency is not too great, the advantages of being in the idle mode and saving battery power outweigh the disadvantages of the connection latency.

[0073] Reference is again made to **Figure 1**. Various UMTS infrastructure vendors move between states **122**, **124**, **126** and **128** based on various criteria. These criteria could be the network operator's preferences regarding the saving of signaling or the saving of radio resources, among others. Exemplary infrastructures are outlined below.

[0074] In a first exemplary infrastructure, the RRC moves between an idle mode and a Cell_DCH state directly after initiating access in a CELL_FACH state. In the Cell_DCH state, if two seconds of inactivity are detected, the RRC state changes to a Cell_FACH state **124**. If, in Cell_FACH state **124**, ten seconds of inactivity are detected then the RRC state changes to Cell_PCH state **126**. Forty five minutes of inactivity in Cell_PCH state **126** will result in the RRC state moving back to idle mode **110**.

[0075] In a second exemplary infrastructure, RRC transition can occur between an idle mode **110** and connected mode **120** depending on a payload threshold. In the second infrastructure, if the payload is below a certain threshold then the UTRAN moves the RRC state to CELL_FACH state **124**. Conversely, if the data payload is above a certain payload threshold then the UTRAN moves the RRC state to a CELL_DCH state **122**. In the second infrastructure, if two minutes of inactivity are detected in CELL_DCH state **122**, the UTRAN moves the RRC state to CELL_FACH state **124**. After five minutes of inactivity in the CELL_FACH state **124**, the UTRAN moves the RRC state to CELL_PCH state **126**. In CELL_PCH state **126**, two hours of inactivity are required before moving back to idle mode **110**.

[0076] In a third exemplary infrastructure, movement between idle mode **110** and connected mode **120** is always to CELL_DCH state **122**. After five seconds of inactivity in CELL_DCH state **122** the UTRAN moves the RRC state to CELL_FACH state **124**. Thirty seconds of inactivity in CELL_FACH state **124** results in the movement back to idle mode **110**.

[0077] In a fourth exemplary infrastructure the RRC transitions from an idle mode to a connected mode directly into a CELL_DCH state **122**. In the fourth exemplary infrastructure, CELL_DCH state **122** includes two configurations. The first includes a configuration which has a high data rate and a second configuration includes a lower data rate, but still within the CELL_DCH state. In the fourth exemplary infrastructure, the RRC transitions from idle mode **110** directly into the high data rate CELL_DCH sub-state. After 10 seconds of inactivity the RRC state transitions to a low data rate CELL_DCH sub-state. Seventeen seconds of inactivity from the low data sub-state of CELL_DCH state **122** results in the RRC state changing it to idle mode **110.**

[0078] The above four exemplary infrastructures show how various UMTS infrastructure vendors are implementing the states. As will be appreciated by those skilled in the art, in each case, if the time spent on exchanging actual data (such as an email) is significantly short compared to the time that is required to stay in the CELL_DCH or the CELL_FACH states. This causes unnecessary current drain, making the user experience in newer generation networks such as UMTS worse than in prior generation networks such as GPRS.

[0079] Further, although the CELL_PCH state **126** is more optimal than the CELL_FACH state **124** from a battery life perspective, the DRX cycle in a CELL_PCH state **126** is typically set to a lower value than the idle mode **110**. As a result, the UE is required to wake up more frequently in the CELL_PCH state **126** than in an idle mode **110**.

[0080] The URA_PCH state **128** with a DRX cycle similar to that of the idle state **110** is likely the optimal trade up between battery life and latency for connection. However, URA_PCH state **128** is currently not implemented in the UTRAN. In some cases, it is therefore desirable to quickly transition to the idle mode as quickly as possible after an application is finished with the data exchange, from a battery life perspective.

[0081] Reference is now made to **Figure 3**. When transitioning from an idle mode to a connected mode various signaling and data connections need to be made. Referring to **Figure 3**, the first item to be performed is an RRC connection setup **310**. As indicated above, this RRC connection setup **310** can only be torn down by the UTRAN.

[0082] Once RRC connection setup **310** is accomplished, a signaling connection setup **312** is started.

[0083] Once signaling connection setup **312** is finished, a ciphering and integrity setup **314** is started. Upon completion of this, a radio bearer setup **316** is accomplished. At this point, data can be exchanged between the UE and UTRAN.

[0084] Tearing down a connection is similarly accomplished in the reverse order, in general. The radio bearer setup **316** is taken down and then the RRC connection setup **310** is taken down. At this point, the RRC moves into idle mode **110** as illustrated in **Figure 1**.

[0085] Although the current 3GPP specification does not allow the UE to release the RRC connection or indicate its preference for RRC state, the UE can still indicate termination of a signaling connection for a specified core network domain such as the Packet Switched (PS) domain used by packet-switched applications. According to section 8.1.14.1 of 3GPP TS 25.331, the SIGNALING CONNECTION RELEASE INDICATION procedure is used by the UE to indicate to the UTRAN that one of its signaling connections has been released. This procedure may in turn initiate the RRC connection release procedure.

[0086] Thus staying within the current 3GPP specifications, signaling connection release may be initiated upon the tearing down of the signaling connection setup **312**. It is within the ability of the UE to tear down signaling connection setup **312**, and this in turn according to the specification "may" initiate the RRC connection release.

[0087] As will be appreciated by those skilled in the art, if signaling connection setup **312** is torn down, the UTRAN will also need to clean up deciphering and integrity setup **314** and radio bearer setup **316** after the signaling connection setup **312** has been torn down.

[0088] If signaling connection setup **312** is torn down, the RRC connection setup is typically brought down by the network for current vendor infrastructures if no CS connection is active.

[0089] Using this for one of the specific transition indication examples mentioned above, if the UE determines that it is done with the exchange of data, for example if a "connection manager" component of the UE software is provided with an indication that the exchange of data is complete, then the connection manager may determine whether or not to tear down the signaling setup **312**. For example, an email application on the device sends an indication that it has received an acknowledgement from the push email server that the email was indeed received by the push server. The connection manager can, in one embodiment, keep track of all existing applications, associated PDP contexts, associated PS radio resources and associated circuit switched (CS) radio bearers. In other embodiments a network element (e.g. the UTRAN) can keep track of existing applications, associated PDP contexts, QoS, associated PS radio resources and associated CS radio bearers. A delay can be introduced at either the UE or network element to ensure that the application(s) is (are) truly finished with data exchange and no longer require an RRC connection even after the "done" indication(s) have been sent. This delay can be made equivalent to an inactivity timeout associated with the application(s) or the UE. Each application can have its own inactivity timeout and thus the delay can be a composite of all of the application timeouts. For example, an email application can have an inactivity timeout of five seconds, whereas an active browser application can have a timeout of sixty seconds. An inhibit duration timer can further delay sending of a transition indication. Based on a composite status of all such indications from active applications, as well as a radio resource profile and/or inhibit duration timer delay in some embodiments, the UE software decides how long it should or must wait before it sends a transition indication (for eg. a signaling connection release indication or state change request) for the appropriate core network (e.g. PS Domain). If the delay is implemented at the network element, the element makes a determination of whether to and how to transition the UE, but only operates the transition after the delay has run its course.

[0090] The inactivity timeout can be made dynamic based on a traffic pattern history and/or application profile.

[0091] If the network element transitions the UE to idle mode **110**, which can happen in any stage of the RRC connected mode **120** as illustrated in **Figure 1**, the network element releases the RRC connection and moves the UE to idle mode **110** as illustrated in **Figure 1**. This is also applicable when the UE is performing any packet data services during a voice call. In this case, the network may choose to

release only the PS domain signaling connection, and maintain the CS domain signaling connection or alternatively may choose not to release anything and instead maintain the signaling connections to both the PS and CS domains.

[0092] In a further embodiment, a cause could be added to the transition indication indicating to the UTRAN the reason for the indication. In a preferred embodiment, the cause could be an indication that an abnormal state caused the indication or that the indication was initiated by the UE as a result of a requested transition. Other normal (i.e. non-abnormal) transactions could also result in the sending of the transition indication.

[0093] In a further preferred embodiment, various timeouts can cause a transition indication to be sent for an abnormal condition. The examples of timers below are not exhaustive, and other timers or abnormal conditions are possible. For example, 10.2.47 3GPP TS 24.008 specifies timer T3310 as:

TIMER NUM.	TIMER VALUE	STATE	CAUSE OF START	NORMAL STOP	ON THE 1st, 2nd, 3rd, 4th EXPIRY Note 3
T3310	15s	GMM-REG-INIT	ATTACH REQ sent	ATTACH ACCEPT received ATTACH REJECT received	Retransmission of ATTACH REQ

TIMER T3310

[0094] This timer is used to indicate an attachment failure. The failure to attach could be a result of the network or could be a radio frequency (RF) problem such as a collision or bad RF.

[0095] The attachment attempt could occur multiple times, and an attachment failure results from either a predetermined number of failures or an explicit rejection.

[0096] A second timer of 10.2.47 of 3GPP is timer T3330, which is specified as:

TIMER NUM.	TIMER VALUE	STATE	CAUSE OF START	NORMAL STOP	ON THE 1st, 2nd, 3rd, 4th EXPIRY Note 3
T3330	15s	GMM-ROUTING-UPDATING-INITIATED	ROUTING AREA UPDATE REQUEST sent	ROUTING AREA UPDATE ACC received ROUTING AREA UPDATE REJ received	Retransmission of the ROUTING AREA UPDATE REQUEST message

TIMER T3330

[0097] This timer is used to indicate a routing area update failure. Upon expiry of the timer, a further routing area update could be requested multiple times and a routing area update failure results from either a predetermined number of failures or an explicit rejection.

[0098] A third timer of 10.2.47 of 3GPP is timer T3340, which is specified as:

TIMER NUM.	TIMER VALUE	STATE	CAUSE OF START	NORMAL STOP	ON THE 1st, 2nd, 3rd, 4th EXPIRY Note 3
T3340 (Iu mode only)	10s	GMM-REG-INIT GMM-DEREG-INIT GMM-RA-UPDATING-INT GMM-SERV-REQ-INIT (Iu mode only) GMM-ATTEMPTING-TO-UPDATE-MM GMM-REG-NORMAL-SERVICE	ATTACH REJ, DETACH REQ, ROUTING AREA UPDATE REJ or SERVICE REJ with any of the causes #11, #12, #13 or #15. ATTACH ACCEPT or ROUTING AREA UPDATE ACCEPT is received with "no follow-on proceed" indication.	PS signalling connection released	Release the PS signalling connection and proceed as described in subclause 4.7.1.9

TIMER T3340

[0099] This timer is used to indicate a GMM service request failure. Upon expiry of the timer, a further GMM service request could be initiated multiple times and a

GMM service request failure results from either a predetermined number of failures or an explicit rejection.

[00100] Thus, instead of a transition indication cause limited to an abnormal condition and a release by the UE, the transition indication cause could further include information about which timer failed for an abnormal condition. In a specific example where a signaling connection release indication is used as a transition indication, the indication could be structured as:

Information Element/Group name	Need	Multi	IE type and reference	Semantics description
Message Type	MP		Message type	
UE Information Elements				
Integrity check info	CH		Integrity check info 10.3.3.16	
CN information elements				
CN domain identity	MP		CN domain identity 10.3.1.1	
Signaling Connection Release Indication Cause	OP		Signaling Release Indication Cause	t3310 timeout, t3330 timeout, t3340 timeout, UE Requested Idle Transition

SIGNALING CONNECTION RELEASE INDICATION

[00101] This message is used by the UE to indicate to the UTRAN a request to release an existing signaling connection. The addition of the signaling connection release indication cause allows the UTRAN or other network element to receive the cause of the signaling connection release indication, whether it was due to an abnormal condition, and what the abnormal condition was. Based on the receipt of the SIGNALING CONNECTION RELEASE INDICATION, an RRC connection release procedure is, in turn, permitted to be initiated at the UTRAN.

[00102] In one implementation of this example, the UE, upon receiving a request to release, or abort, a signaling connection from upper layers for a specific CN (core network) domain, initiates the signaling connection release indication procedure if a signaling connection is identified in a variable For example, a variable ESTABLISHED_SIGNALING_CONNECTIONS, for the specific CN domain identified

with the IE (information element) "CN domain identity" exists. If the variable does not identify any existing signaling connection, any ongoing establishment of a signaling connection for that specific CN domain is aborted in another manner. Upon initiation of the signaling connection release indication procedures in the Cell_PCH or URA_PCH states, the UE performs a cell update procedure using a cause "uplink data transmission". When a cell update procedure is completed successfully, the UE continues with the signaling connection release indication procedures that follow.

[00103] Namely, the UE sets the information element (IE) "CN domain identity" to the value indicated by upper logical layers. The value of the IE indicates the CN domain whose associated signaling connection the upper layers are marking to be released. If the CN domain identity is set to the PS domain, and if the upper layer indicates the cause to initiate this request, then the IE "SIGNALING RELEASE INDICATION CAUSE" is accordingly set. The UE further removes the signaling connection with the identity indicated by upper layers from the variable "ESTABLISHED_SIGNALING_CONNECTIONS". The UE transmits a SIGNALING CONNECTION RELEASE INDICATION message on, e.g., the Dedicated Control Channel (DCCH) using acknowledged mode radio link control (AM RLC). Upon confirmation of successful delivery of the release indication message by the RLC, the procedure ends.

[00104] An IE "Signaling Connection Release Indication Cause is also used pursuant to an embodiment of the present disclosure. The release cause is aligned, for instance, with existing message definitions. The upper layer release cause message is structured, e.g., as:

Information Element/Group name	Need	Multi	IE type and reference	Semantics description
Signaling Connection Release Indication Cause	MP		Enumerated (UE Requested PS Data session end, T3310 expiry, T3330 expiry,	
			T3340 expiry)	

In this example, the T3310, T330, and T3340 expiries correspond to expiration of correspondingly-numbered timers, identified previously. A cause value is settable, in one implementation, as a "UE Requested PS Data session end" rather than a "UE Requested idle transition" to remove the UE indication of a preference for an idle transition and provide for the UTRAN to decide upon the state transition, although the expected result corresponds to that identified by the cause value. The extension to the signaling connection release indication is preferably, but not necessarily, a non-critical extension.

[00105] Reference is now made to **Figure 9**. **Figure 9** is a flow chart of an exemplary UE monitoring whether or not to send a signaling connection release indication for various domains (e.g. PS or CS). The process starts in step **910**.

[00106] The UE transitions to step **912** in which it checks to see whether an abnormal condition exists. Such an abnormal condition can include, for example, timer T3310, timer T3320, or timer T3340 expiring as described above. If these timers expire a certain predetermined number of times or if an explicit rejection is received based on the expiry of any of these timers, the UE proceeds to step **914** in which it sends a signaling connection release indication. The SIGNALING CONNECTION RELEASE INDICATION message is appended with a signaling release indication cause field. The signaling release indication cause field includes at least that the signaling release indication is based on an abnormal condition or state and one embodiment includes the specific timer that timed out to result in the abnormal condition.

[00107] Conversely, if in steps **912** the UE finds that no abnormal condition exists, the UE proceeds to step **920** in which it checks whether further data is expected at the UE. This can, as described above, include when an email is sent and confirmation of the sending of the email is received back at the UE. Other examples of where the UE will determine that no further data is expected would be known to those skilled in the art.

[00108] If in step **920** the UE determines that the data transfer is finished (or in the case of a circuit switched domain that a call is finished) the UE proceeds to step **922** in which it sends a signaling connection release indication in which the signaling release indication cause field has been added and includes the fact that the UE requested an idle transition or simply indicate an end to the PS session.

[00109] From step **920**, if the data is not finished the UE loops back and continues to check whether an abnormal condition exists in step **912** and whether the data is finished in step **920**.

[00110] Once the signaling connection release indication is sent in step **914** or step **922**, the process proceeds to step **930** and ends.

[00111] The UE includes functional elements, implementable, for instance, by applications or algorithms carried out through operation of a UE microprocessor or by hardware implementation, that form a checker and a transition indication sender. The checker is configured to check whether a transition indication should be sent. And, a transition indication sender is configured to send a transition indication responsive to an indication by the checker that the transition indication should be sent. The transition indication may include a transition indication cause field.

[00112] In one implementation, the network is, instead, implicitly made aware of timing out of a timer, and the UE need not send a cause value indicating the timing out of the timer. That is to say, the timer starts timing upon authorization of the network. Cause codes are defined, and the cause codes are provided by the network to the UE. Such cause codes are used by the UE to initiate the timer. The network is implicitly aware of the reason for subsequent timing out of the timer as the cause code sent earlier by the network causes the timer to start timing. As a result, the UE need not send a cause value indicating the timing out of the timer.

[00113] As suggested by **Figure 9** as well as the foregoing description, a cause is includable and sent together with a transition indication (e.g. a SIGNALING CONNECTION RELEASE INDICATION) to indicate: 1.) an abnormal condition as well as 2.) a normal condition (not an abnormal condition such as for example a request for a PS data session end and/or a transition to an idle mode)). In various implementations, therefore, operations at the UE provide for the adding of the cause to the transition indication to indicate an abnormal condition, or, alternately, to indicate a preference for a request of an idle transition or of a PS data session end, i.e., normal operation. Such operation, of course, also includes UE operation in which a cause is added to the transition indication only when an indication of an abnormal condition is to be made. And, conversely, such operation also includes UE operation in which a cause is added to a transition indication only to indicate normal,

i.e., non-abnormal, operations and transactions. That is to say, with respect to **Figure 9**, in such alternative operation, if, at step **912**, an abnormal condition exists, the yes branch is taken to the step **914** while, if an abnormal condition does not exist, then the UE proceeds directly to the end step **930**. Conversely, in the other such alternative operation, subsequent to the start step **912** a path is taken directly to the data finished step **920**. If the data is finished, the yes branch is taken to the step **920** and, thereafter, to the step **930**. If the data is not finished at the step **920**, the no branch is taken back to the same step, i.e., step **920**.

[00114] Referring to **Figure 10**, when a network element receives the transition indication in step **1010** (e.g. a signaling connection release indication as shown), the network element examines the transition indication cause field if present in step **1014** and in step **1016** checks whether the cause is an abnormal cause or whether it is due to the UE requesting an idle transition and/or PS data session end. If, in step **1016**, the signaling connection release indication is of abnormal cause, the network node proceeds to step **1020** in which an alarm may be noted for performance monitoring and alarm monitoring purposes. The key performance indicator can be updated appropriately.

[00115] Conversely, if in step **1016** the cause of the transition indication (e.g. signaling connection release indication) is not a result of an abnormal condition, or in other words is a result of the UE requesting a PS data session end or idle transition, the network node proceeds to step **1030** in which no alarm is raised and the indication can be filtered from the performance statistics, thereby preventing the performance statistics from being skewed. From step **1020** or step **1030** the network node proceeds to step **1040** in which the process ends.

[00116] The reception and examination of the transition indication may result in the initiation by the network element of packet switched data connection termination or alternatively to a transition into another more suitable state, for example CELL_FACH, CELL_PCH, URA_PCH or IDLE_MODE.

[00117] As suggested above, in some implementations, the absence of a cause in a transition indication may also be used to determine whether the transition indication is a result of a normal or an abnormal condition and whether an alarm must be raised. For example, if a cause is added only to denote normal conditions (ie. non-abnormal such as for e.g. a request for PS data session end and/or transition to idle

mode), and the network element receives a transition indication with no cause added, the network element may infer from the absence of a cause that the transition indication is a result of an abnormal condition and optionally raise an alarm. Conversely, in another example, if a cause is added only to denote abnormal conditions, and the network element receives a transition indication with no cause, the network element may infer from the absence of a cause that the transition indication is a result of a normal condition (e.g. request for PS data session end and/or transition to idle mode) and not raise an alarm.

[00118] As will be appreciated by those skilled in the art, step **1020** can be used to further distinguish between various alarm conditions. For example, a T3310 time out could be used to keep a first set of statistics and a T3330 time out could be used to keep a second set of statistics. Step **1020** can distinguish between the causes of the abnormal condition, thereby allowing the network operator to track performance more efficiently.

[00119] The network includes functional elements, implementable, for instance, by applications or algorithms carried out through operation of a processor or by hardware implementation, that form an examiner and an alarm generator. The examiner is configured to examine a transition indication cause field of the transition indication. The examiner checks whether the transition indication cause field indicates an abnormal condition. The alarm generator is configured to selectably generate an alarm if examination by the examiner determines the signaling connection release indication cause field indicates the abnormal condition.

[00120] In one implementation, upon reception of a signaling connection release indication, the UTRAN forwards the cause that is received and requests, from upper layers, for the release of the signaling connection. The upper layers then are able to initiate the release of the signaling connection. The IE signaling release indication cause indicates the UE's upper layer cause to trigger the RRC of the UE to send the message. The cause is possibly the result of an abnormal upper layer procedure. Differentiation of the cause of the message is assured through successful reception of the IE.

[00121] A possible scenario includes a scenario in which, prior to confirmation by the RLC of successful delivery of the SIGNALING CONNECTION RELEASE INDICATION message, reestablishment of the transmitting side of the RLC entity on

the signaling radio bearer RB2 occurs. In the event of such an occurrence, the UE retransmits the SIGNALING CONNECTION RELEASE INDICATION message, e.g., on the uplink DCCH using AM RLC on signaling radio bearer RB2. In the event that an inter-RAT (radio access technology) handover from UTRAN procedure occurs prior to confirmation by the RLC of the successful delivery of the SIGNALING CONNECTION RELEASE INDICATION or request message, the UE aborts the signaling connection when in the new RAT.

[00122] In a further embodiment, instead of a "signaling connection release indication" or request, a "data transfer complete indication" could be utilized. Functionality similar to that described in **Figures 9** and **10** above would be applicable to this data transfer complete indication.

[00123] In one embodiment, the data transfer complete indication is used by the UE to inform the UTRAN that the UE has determined that there is no on-going CS domain data transfer, and it has completed its PS data transfer. Such a message is sent from the UE to UTRAN on the DCCH using AM RLC, for example. An exemplary message is shown below.

10.2.x DATA TRANSFER COMPLETE INDICATION

This message is used by the UE to inform the UTRAN that the UE has determined that there is no on-going CS domain data transfer, and it has completed its PS data transfer.

RLC-SAP: AM

Logical channel: DCCH

Direction: UE→UTRAN

Information Element/Group name	Need	Multi	IE type and reference	Semantics description
Message Type	MP		Message type	
UE Information Elements				
Integrity check info	MP		Integrity check info 10.3.3.16	

Data Transfer Complete Indication

[00124] Reference is now made to **Figure 20**. **Figure 20** illustrates the embodiment within which a transition indication or request (for e.g. a signaling connection release indication or a data transfer complete indication) is sent from the UE to the UTRAN. The process starts at step **2010** and proceeds to step **2012** in which a check is made on the UE to determine whether the conditions at the UE are appropriate to send a transition indication message. Such conditions are described in the present disclosure, for example with reference to **Figure 11** below, and could include one or more applications on the UE determining that they are finished with data exchange. Such conditions may also include waiting for some time duration for the timer T3xx to expire if it is running.

[00125] In a further and alternative embodiment, the conditions may include precluding the sending of the transition indication if timer T3xx is set to infinity. As will be appreciated, T3xx could include a number of discrete values, one of which represents an infinity value.

[00126] If, in step **2012**, the conditions are not appropriate to send the transition indication or request message, the process loops on itself and continues to monitor until conditions are appropriate to send the transition indication or request message.

[00127] Once the conditions are appropriate the process proceeds to step **2020** in which a transition indication is sent to the UTRAN. Exemplary indications are shown in the tables above.

[00128] The process then proceeds to step **2022** in which a check is made to determine whether the transition indication was successful. As would be appreciated by those skilled in the art this could mean that the UTRAN has successfully received

the transition indication and has initiated a state transition. If yes, the process proceeds to step **2030** and ends.

[00129] Conversely, if it is determined in step **2022** that the transition indication was not successful the process proceeds to step **2024** and waits for a time period. Such a wait could be implemented using an "inhibit duration", e.g. T3xx, that would not allow the mobile to send another transition indication message before a given duration has elapsed. Alternatively, the process could limit the number of transition indication messages within a given time period (e.g. no more than 15 messages in 10 minutes). A combination of the inhibition duration and limiting the number of messages within a given time period is also possible.

[00130] The duration could be predetermined, such as a value defined in the standards, could be set by a network element, for example, as part of a RRC connection request, a RRC connection setup message, a RRC connection release, a radio bearer set up, a system information broadcast message, a system information block message, an ACTIVE SET UPDATE, a CELL UPDATE CONFIRM, UTRAN Mobility Information Message, a Handover to UTRAN Command, a Physical Channel Reconfiguration Message, a Radio Bearer Reconfiguration Message, a Radio Bearer Release Message, a Transport Channel Reconfiguration Message, or any request, configuration or reconfiguration message. Further, the duration could be set based on a parameter within the transition indication message. Thus, the duration could be longer if the UE is requesting a transition to Cell_PCH rather than Idle.

[00131] The signaling or sending of the duration by a network element could take the form of an information element. As used herein, signaling or sending could include directly sending the information to a UE, or broadcasting the information. Similarly, receiving at the UE could include direct reception or reading of a broadcast channel. One exemplary information element includes:

Information Element/Group name	Need	Multi	Type and reference	Semantics description
Inhibit Transition Indication	MP		Enumerated(T3xx, 1 spare value)	

Inhibit Transition Indication

[00132] The values of T3xx, in one embodiment are defined as:

Information Element/Group name	Need	Multi	Type and reference	Semantics description
T3xx	MD		Enumerated (0,30,60,90, 120,infinity)	Value in seconds. Two spare values are needed. The use of 0 seconds indicates no need to apply the inhibit timer, and may be sent to override a previous non 0 setting. The use of infinity indicates never send the Transition Indication Message.

T3xx Definition

[00133] In one embodiment T3xx can be included in the existing UMTS Information Element "UE Timers and Constants in connected mode". This can therefore be broadcast in a cell by inclusion in System Information Block Type 1. In an alternative embodiment the timer value could also be signaled using other system information messages, such as SIB3 or SIB4, or either alternatively or additionally could be signaled with a dedicated UTRAN mobility information message.

[00134] As indicated in the Table above, the T3xx value can vary between set values and include a zero value or an infinity value. The zero value is used to indicate that no inhibition needs to occur. The infinity value indicates that a Transition Indication Message should never be sent.

[00135] In one mobility embodiment, the UE resets the T3xx value whenever a new network or cell is transitioned to. In this example, the value is set to infinity. This ensures that if a transitioning messages or Radio Bearer Messages does not contain an inhibit timer value then by default the UE is not to send the Transition Indication Message. Thus, for example, if the transition or Radio Bearer Messages do not contain an "Inhibit Transition Indication", the value of the timer is set to infinity and otherwise the value of the timer received in the indication replaces any previously stored value.

[00136] In another alternative embodiment the values of T3xx, are defined as follows. The inclusion of the timer T3xx is optional thereby ensuring that if not included the UE need not have to support configuring or using this timer:

Information Element/Group name	Need	Multi	Type and reference	Semantics description
T3xx	OP		Enumerated (0, 5, 10, 20, 30, 60, 90, 120)	Value in seconds. The use of 0 seconds indicates no need to apply the inhibit timer, and may be sent to override a previous non 0 setting.

An alternative T3xx Definition

[00137] The reception of the inhibit timer in a cell is thus an indication to the UE that the cell recognizes the use of the transition indication message. The UE may determine, if initiated by the RRC or higher layers due to a determination of no more PS domain data for a prolonged duration, to signal a transition indication using a cause value. When the network receives a transition indication message (of whatever form, as captured in this document) with this cause value it may determine to signal to the UE a state transition change to a more battery efficient RRC State.

[00138] Whereas in an alternative embodiment when the inhibit timer is not received or read in a cell the UE can determine that the cause for sending the transition indication message, is not supported by the UTRAN. In this case the UE can determine to not configure a value for T3xx and also not to use the T3xx in relation to sending or inhibiting the sending of the transition indication message.

[00139] If the UE determines that the inhibit timer is omitted then it may omit to include the cause value from the transition indication message and just send the transition indication message, based on higher layer determining that it has no more PS data to transmit.

[00140] In an alternative embodiment the UE on determining that the inhibit timer is omitted the UE shall not initiate a transition indication based on higher layer determining that it has no more PS data to transmit.

[00141] In one embodiment of this described behavior, the transition indication message is the SIGNALING CONNECTION RELEASE INDICATION message.

[00142] In a first alternative embodiment, the reception of the inhibit timer in a cell is thus an indication that the cell recognizes the use of the transition indication

messages. Where the sending of this message is permitted when the T3xx is not set to infinity value , then when the network receives a transition indication it may determine to signal to the UE a state transition to a more battery efficient RRC State (e.g. CELL_FACH, CELL_PCH, URA_PCH or IDLE_MODE).

[00143] In a particular example utilizing 3GPP TSG-RAN2 25.331 standard, the following is added to the sections identified below:

Inhibit Transition Indication	OP		Inhibit Transition Indication 10.3.3.14b	

Inhibit Transition Indication

[00144] This is added to sections:

10.2.48.8.6 System Information Block Type 3;

10.2.48.8.7 System Information Block Type 4;

10.2.1 Active Set Update;

10.2.8 Cell Update Confirm;

10.2.16a Handover to UTRAN Command;

10.2.22 Physical Channel Reconfiguration;

10.2.27 Radio Bearer Reconfiguration;

10.2.30 Radio Bearer Release;

10.2.33 Radio Bearer Setup;

10.2.40 RRC Connection Setup;

10.2.50 Transport Channel Reconfiguration;

[00145] The messages described above, besides messages10.2.48.8.6 System Information Block Type 3 and 10.2.48.8.7 System Information Block Type 4, are all examples of mobility information messages.

[00146] The above covers connections and system operations, as well as transitions between various cells, ensuring that a UE has an inhibit timer value if that cell supports the transition indication message. For example, the Handover to UTRAN Command ensures that a transition from another Radio Access Technology such as a second generation network to a third generation network will provide an inhibit timer value if supported by the third generation network's target cell.

[00147] In particular referring to **Figure 21**, a transition between cells has occurred as a precondition or a during other operation of the UE, as shown by reference numeral **2110** as 'Start'. The process proceeds to block **2112** in which a configuration message is received. This can be any of the messages identified above, and includes both mobility and non-mobility messages. The process then proceeds to block **2114** in which a check is made to see whether the configuration message includes an inhibit timer value.

[00148] If not, the process proceeds to block **2120** in which the inhibit timer value is set to infinity. Conversely, from block **2114** the process proceeds to block **2130** if it is determined that the configuration message does include an inhibit timer value. In block **2130** the inhibit timer value is stored on the UE, replacing the previous value for the inhibit timer. The process then proceeds to block **2140** and ends. As will be appreciated, in one embodiment the process of **Figure 21** is invoked whenever a change in network or cell occurs, or whenever a transition indication needs to be sent.

[00149] Once the process has waited for a predetermined time in step **2024** the process proceeds back to step **2012** to determine whether the conditions for sending a transition indication still exist. If yes, the process loops back to step **2020** and **2022**.

[00150] Based on the above, the inhibit timer value may be provided in various embodiments. In a first embodiment it can be provided only using an RRC Connection Setup Message to convey an inhibit timer value.

[00151] In a second embodiment, system information can be used to convey the inhibit timer value.

[00152] In a third embodiment the RRC Connection Setup and System Information Messages can both be utilized to send the inhibit timer value to ensure that UEs in idle mode and Cell_PCH/Cell_FACH and DCH states have the latest information.

[00153] In a fourth embodiment the inhibit timer value can be sent as in the third embodiment, with the addition of sending an inhibit timer value in a Radio Bearer Setup so that when a PDP context is established having no Radio Bearer, when a

Radio Bearer is subsequently established to send a data message the inhibit timer value can be conveyed at that time.

[00154] In a fifth embodiment the fourth embodiment can be combined with all mobility related messages as described above and including reconfiguration, cell update confirmation and a Handover to UTRAN command to convey the inhibit timer value.

[00155] In the first to fourth embodiments, during mobility the UE maintains its currently stored inhibit timer value. As indicated above, in some cases where the inhibit timer is set to infinity this may mean that the UE must wait for network timers to expire and for the network to move the UE to an RRC state where it can receive or determine a new value for the inhibit timer. In other cases where the inhibit timer is some value other than infinity before the handover, this other value is continued to be used until the UE is able to update the timer value to that indicated in the new cell.

[00156] For the fifth embodiment, the process **Figure 21** is utilized to ensure that the inhibit timer value is updated during mobility, and that transition indication messages are not sent unnecessarily from a UE.

[00157] An exception may occur on RLC re-establishment or inter-RAT change. If a re-establishment of the transmitting side of the RLC entity occurs before the successful delivery of the transition indication message has been confirmed by the RLC, in one embodiment the UE retransmits the transition indication message on the uplink DCCH using AM RLC.

[00158] In one embodiment, if an inter-RAT handover from UTRAN procedure occurs before the successful delivery of the transition indication message has been confirmed by the RLC the UE aborts the signaling connection while in the new RAT.

[00159] On the network side, the process is handled similarly to that described with reference to **Figure 18** below.

[00160] Referring again to **Figure 1**, in some cases it may be more desirable to be in the connected mode **120** in a state such as URA_PCH state **128** than in idle mode **110**. For example, if the latency for connection to the CELL_DCH state **122** or the CELL_FACH state **124** in connected mode **120** is required to be lower, it is

preferable to be in a connected mode **120** PCH state. There are a number of ways of accomplishing this such as, for example, by amending standards to allow for the UE to request the UTRAN move it to a specific state (e.g. in this case the URA_PCH state **128**).

[00161] Alternatively, the connection manager may take into account other factors such as what state the RRC connection is currently in. If, for example, the RRC connection is in the URA_PCH state it may decide that it is unnecessary to move to idle mode **110** and thus no signaling connection release procedure is initiated.

[00162] In a further alternative, the network element (e.g. the UTRAN) may itself take into account other factors such as what state the RRC connection is currently in and if, for example, the RRC connection is in the URA_PCH state it may decide that it is unnecessary to move to idle mode **110** and instead simply transition the UE into a more suitable state instead of releasing the connection.

[00163] Reference is made to **Figure 4**. **Figure 4A** shows a current UMTS implementation according to the infrastructure "four" example above. As illustrated in **Figure 4**, time is across the horizontal axes.

[00164] The UE starts in RRC idle state **110** and based on local or mobile generated data needing to be transmitted or a page received from the UTRAN, starts to establish an RRC connection.

[00165] As illustrated in **Figure 4A**, RRC connection setup **310** occurs first, and the RRC state is in a connecting state **410** during this time.

[00166] Next, signaling connections setup **312**, ciphering and integrity setup **314**, and radio bearer setup **316** occurs. The RRC state is CELL_DCH state **122** during these procedures. As illustrated in **Figure 4A,** the elapsed time for moving from RRC idle to the time that the radio bearer is setup is approximately two seconds in this example.

[00167] Data is next exchanged. In the example of **Figure 4A** this is achieved in about two to four seconds and is illustrated by step **420**.

[00168] After data is exchanged in step **420,** no data is being exchanged except for intermittent RLC signaling PDU as required and thus the radio resource is reconfigured by the network to move into a lower data rate DCH configuration after approximately ten seconds. This is illustrated in steps **422** and **424**.

[00169] In the lower data rate DCH configuration, nothing is received for seventeen seconds, at which point the RRC connection is released by the network in step **428**.

[00170] Once the RRC connection release is initiated in step **428**, the RRC state proceeds to a disconnecting state **430** for approximately forty milliseconds, after which the UE is in a RRC idle state **110**.

[00171] Also illustrated in **Figure 4A**, the UE current consumption is illustrated for the period in which the RRC is in CELL_DCH state **122**. As seen, the current consumption is approximately 200 to 300 milliamps for the entire duration of the CELL_DCH state. During disconnect and idle, about 3 milliamps are utilized, assuming a DRX cycle of 1.28 seconds. However, the 35 seconds of current consumption at 200 to 300 milliamps is draining on the battery.

[00172] Reference is now made to **Figure 4B**. **Figure 4B** utilizes the same exemplary infrastructure "four" from above, only now implementing the signaling connection release

[00173] As illustrated in **Figure 4B**, the same setup steps **310**, **312**, **314** and **316** occur and this takes the same amount of time when moving between RRC idle state **110** and RRC CELL_DCH state **122**.

[00174] Further, the RRC data PDU exchange for the exemplary email at step **420** of **Figure 4A** is also done at **Figure 4B** and this takes approximately two to four seconds.

[00175] The UE in the example of **Figure 4B** has an application specific inactivity timeout, which in the example of **Figure 4B** is two seconds and is illustrated by step **440**. After the connection manager has determined that there is inactivity for the specific amount of time, the UE sends a transition indication, which in this case is a signaling connection release indication in step **442** and in step **448**, the network

proceeds, based on the receipt of the indication and on a radio resource profile for the UE, to release the RRC connection.

[00176] As illustrated in **Figure 4B**, the current consumption during the CELL_DCH step **122** is still about 200 to 300 milliamps. However, the connection time is only about eight seconds. As will appreciated by those skilled in the art, the considerably shorter amount of time that the mobile stays in the cell DCH state **122** results in significant battery savings for UE device.

[00177] Reference is now made to **Figure 5**. **Figure 5** shows a second example using the infrastructure indicated above as Infrastructure "three". As with **Figures 4A** and **4B**, a connection setup occurs which takes approximately two seconds. This requires the RRC connection setup **310**, the signaling connection setup **312**, the ciphering and integrity setup **314** and the radio bearer setup **316**.

[00178] During this setup, the UE moves from RRC idle mode **110** to a CELL_DCH state **122** with a RRC state connecting step **410** in between.

[00179] As with **Figure 4A**, in **Figure 5A** RLC data PDU exchange occurs at step **420**, and in the example of **Figure 5A** takes two to four seconds.

[00180] According to the infrastructure three, RLC signaling PDU exchange receives no data and thus is idle for period of five seconds in step **422**, except for intermittent RLC signaling PDU as required, at which point the radio resource reconfigures the UE to move into a CELL_FACH state **124** from CELL_DCH state **122**. This is done in step **450**.

[00181] In the CELL_FACH state **124**, the RLC signaling PDU exchange finds that there is no data except for intermittent RLC signaling PDU as required for a predetermined amount of time, in this case thirty seconds, at which point a RRC connection release by network is performed in step **428**.

[00182] As seen in **Figure 5A,** this moves the RRC state to idle mode **110**.

[00183] As further seen in **Figure 5A**, the current consumption during the DCH mode is between 200 and 300 milliamps. When moving into CELL_FACH state **124** the current consumption lowers to approximately 120 to 180 milliamps. After the

RRC connector is released and the RRC moves into idle mode **110** the power consumption is approximately 3 milliamps.

[00184] The UTRA RRC Connected Mode state being CELL_DCH state **122** or CELL_FACH state **124** lasts for approximately forty seconds in the example of **Figure 5A**.

[00185] Reference is now made to **Figure 5B**. **Figure 5B** illustrates the same infrastructure "three" as **Figure 5A** with the same connection time of about two seconds to get the RRC connection setup **310**, signaling connection setup **312**, ciphering integrity setup **314** and radio bearer setup **316**. Further, RLC data PDU exchange **420** take approximately two to four seconds.

[00186] As with **Figure 4B**, a UE application detects a specific inactivity timeout in step **440,** at which point the transition indication (e.g. signaling connection release indication **442**) is sent by the UE and as a consequence, the network releases the RRC connection in step **448**.

[00187] As can be seen further in **Figure 5B**, the RRC starts in a idle mode **110**, moves to a CELL_DCH state **122** without proceeding into the CELL_FACH state.

[00188] As will be seen further in **Figure 5B**, current consumption is approximately 200 to 300 milliamps in the time that the RRC stage is in CELL_DCH state **122** which according to the example of **Figure 5** is approximate eight seconds.

[00189] Therefore, a comparison between **Figures 4A** and **4B**, and **Figures 5A** and **5B** shows that a significant amount of current consumption is eliminated, thereby extending the battery life of the UE. As will be appreciated by those skilled in the art, the above can further be used in the context of current 3GPP specs.

[00190] Reference is now made to **Figure 6**. **Figure 6** illustrates a protocol stack for a UMTS network.

[00191] As seen in **Figure 6**, the UMTS includes a CS control plane **610**, PS control plane **611**, and PS user plane **630**

[00192] Within these three planes, a non-access stratum (NAS) portion **614** and an access stratum portion **616** exist.

[00193] NAS portion **614** in CS control plane **610** includes a call control (CC) **618**, supplementary services (SS) **620**, and short message service (SMS) **622.**

[00194] NAS portion **614** in PS control plane **611** includes both mobility management (MM) and GPRS mobility management (GMM) **626**. It further includes session management/radio access bearer management SM/RABM **624** and GSMS **628**.

[00195] CC **618** provides for call management signaling for circuit switched services. The session management portion of SM/RABM **624** provides for PDP context activation, deactivation and modification. SM/RABM **624** also provides for quality of service negotiation.

[00196] The main function of the RABM portion of the SM/RABM **624** is to connect a PDP context to a Radio Access Bearer. Thus SM/RABM **624** is responsible for the setup, modification and release of radio resources.

[00197] CS control plane **610** and PS control plane **611**, in the access stratum **616** sit on radio resource control (RRC) **617**.

[00198] NAS portion **614** in PS user plane **630** includes an application layer **638**, TCP/UDP layer **636**, and PDP layer **634**. PDP layer **634** can, for example, include Internet Protocol (IP).

[00199] Access Stratum **616**, in PS user plane **630** includes packet data convergence protocol (PDCP) **632**. PDCP **632** is designed to make the WCDMA protocol suitable to carry TCP/IP protocol between UE and RNC (as seen in **Figure 8**), and is optionally for IP traffic stream protocol header compression and decompression.

[00200] The UMTS Radio Link Control (RLC) **640** and Medium Access Control (MAC) layers **650** form the data link sub-layers of the UMTS radio interface and reside on the RNC node and the User Equipment.

[00201] The Layer 1 (L1) UMTS layer (physical layer **660)** is below the RLC/MAC layers **640** and **650**. This layer is the physical layer for communications.

[00202] While the above can be implemented on a variety of mobile or wireless devices, an example of one mobile device is outlined below with respect to **Figure 7**. Reference is now made to **Figure 7**.

[00203] UE **700** is preferably a two-way wireless communication device having at least voice and data communication capabilities. UE **700** preferably has the capability to communicate with other computer systems on the Internet. Depending on the exact functionality provided, the wireless device may be referred to as a data messaging device, a two-way pager, a wireless e-mail device, a cellular telephone with data messaging capabilities, a wireless Internet appliance, or a data communication device, as examples.

[00204] Where UE **700** is enabled for two-way communication, it will incorporate a communication subsystem **711**, including both a receiver **712** and a transmitter **714**, as well as associated components such as one or more, preferably embedded or internal, antenna elements **716** and **718**, local oscillators (LOs) **713**, and a processing module such as a digital signal processor (DSP) **720**. As will be apparent to those skilled in the field of communications, the particular design of the communication subsystem **711** will be dependent upon the communication network in which the device is intended to operate. For example, UE **700** may include a communication subsystem **711** designed to operate within the GPRS network or UMTS network.

[00205] Network access requirements will also vary depending upon the type of network **719**. For example, In UMTS and GPRS networks, network access is associated with a subscriber or user of UE **700**. For example, a GPRS mobile device therefore requires a subscriber identity module (SIM) card in order to operate on a GPRS network. In UMTS a USIM or SIM module is required. In CDMA a RUIM card or module is required. These will be referred to as a UIM interface herein. Without a valid UIM interface, a mobile device may not be fully functional. Local or non-network communication functions, as well as legally required functions (if any) such as emergency calling, may be available, but mobile device **700** will be unable to carry out any other functions involving communications over the network **700**. The UIM interface **744** is normally similar to a card-slot into which a card can be inserted and

ejected like a diskette or PCMCIA card. The UIM card can have approximately 64K of memory and hold many key configuration **751**, and other information **753** such as identification, and subscriber related information.

[00206] When required network registration or activation procedures have been completed, UE **700** may send and receive communication signals over the network **719**. Signals received by antenna **716** through communication network **719** are input to receiver **712**, which may perform such common receiver functions as signal amplification, frequency down conversion, filtering, channel selection and the like, and in the example system shown in **Figure 7**, analog to digital (A/D) conversion. A/D conversion of a received signal allows more complex communication functions such as demodulation and decoding to be performed in the DSP **720**. In a similar manner, signals to be transmitted are processed, including modulation and encoding for example, by DSP **720** and input to transmitter **714** for digital to analog conversion, frequency up conversion, filtering, amplification and transmission over the communication network **719** via antenna **718**. DSP **720** not only processes communication signals, but also provides for receiver and transmitter control. For example, the gains applied to communication signals in receiver **712** and transmitter **714** may be adaptively controlled through automatic gain control algorithms implemented in DSP **720**.

[00207] Network **719** may further communicate with multiple systems, including a server **760** and other elements (not shown). For example, network **719** may communicate with both an enterprise system and a web client system in order to accommodate various clients with various service levels.

[00208] UE **700** preferably includes a microprocessor **738,** which controls the overall operation of the device. Communication functions, including at least data communications, are performed through communication subsystem **711**. Microprocessor **738** also interacts with further device subsystems such as the display **722**, flash memory **724**, random access memory (RAM) **726**, auxiliary input/output (I/O) subsystems **728**, serial port **730**, keyboard **732**, speaker **734**, microphone **736**, a short-range communications subsystem **740** and any other device subsystems generally designated as **742**.

[00209] Some of the subsystems shown in **Figure 7** perform communication-related functions, whereas other subsystems may provide "resident" or on-device

functions. Notably, some subsystems, such as keyboard **732** and display **722**, for example, may be used for both communication-related functions, such as entering a text message for transmission over a communication network, and device-resident functions such as a calculator or task list.

[00210] Operating system software used by the microprocessor **738** is preferably stored in a persistent store such as flash memory **724**, which may instead be a read-only memory (ROM) or similar storage element (not shown). Those skilled in the art will appreciate that the operating system, specific device applications, or parts thereof, may be temporarily loaded into a volatile memory such as RAM **726**. Received communication signals may also be stored in RAM **726**. Further, a unique identifier is also preferably stored in read-only memory.

[00211] As shown, flash memory **724** can be segregated into different areas for both computer programs **758** and program data storage **750**, **752**, **754** and **756**. These different storage types indicate that each program can allocate a portion of flash memory **724** for their own data storage requirements. Microprocessor **738**, in addition to its operating system functions, preferably enables execution of software applications on the mobile device. A predetermined set of applications that control basic operations, including at least data and voice communication applications for example, will normally be installed on UE **700** during manufacturing. A preferred software application may be a personal information manager (PIM) application having the ability to organize and manage data items relating to the user of the mobile device such as, but not limited to, e-mail, calendar events, voice mails, appointments, and task items. Naturally, one or more memory stores would be available on the mobile device to facilitate storage of PIM data items. Such PIM application would preferably have the ability to send and receive data items, via the wireless network **719**. In a preferred embodiment, the PIM data items are seamlessly integrated, synchronized and updated, via the wireless network **719**, with the mobile device user's corresponding data items stored or associated with a host computer system. Further applications may also be loaded onto the mobile device **700** through the network **719**, an auxiliary I/O subsystem **728**, serial port **730**, short-range communications subsystem **740** or any other suitable subsystem **742**, and installed by a user in the RAM **726** or preferably a non-volatile store (not shown) for execution by the microprocessor **738**. Such flexibility in application installation increases the functionality of the device and may provide enhanced on-device functions, communication-related functions, or both. For example, secure

communication applications may enable electronic commerce functions and other such financial transactions to be performed using the UE **700**. These applications will however, according to the above, in many cases need to be approved by a carrier.

[00212] In a data communication mode, a received signal such as a text message or web page download will be processed by the communication subsystem **711** and input to the microprocessor **738**, which preferably further processes the received signal for output to the display **722**, or alternatively to an auxiliary I/O device **728**. A user of UE **700** may also compose data items such as email messages for example, using the keyboard **732**, which is preferably a complete alphanumeric keyboard or telephone-type keypad, in conjunction with the display **722** and possibly an auxiliary I/O device **728**. Such composed items may then be transmitted over a communication network through the communication subsystem **711**.

[00213] For voice communications, overall operation of UE **700** is similar, except that received signals would preferably be output to a speaker **734** and signals for transmission would be generated by a microphone **736**. Alternative voice or audio I/O subsystems, such as a voice message recording subsystem, may also be implemented on UE **700**. Although voice or audio signal output is preferably accomplished primarily through the speaker **734**, display **722** may also be used to provide an indication of the identity of a calling party, the duration of a voice call, or other voice call related information for example.

[00214] Serial port **730** in **Figure 7** would normally be implemented in a personal digital assistant (PDA)-type mobile device for which synchronization with a user's desktop computer (not shown) may be desirable. Such a port **730** would enable a user to set preferences through an external device or software application and would extend the capabilities of mobile device **700** by providing for information or software downloads to UE **700** other than through a wireless communication network. The alternate download path may for example be used to load an encryption key onto the device through a direct and thus reliable and trusted connection to thereby enable secure device communication.

[00215] Alternatively, serial port **730** could be used for other communications, and could include as a universal serial bus (USB) port. An interface is associated with serial port **730**.

[00216] Other communications subsystems **740**, such as a short-range communications subsystem, is a further optional component which may provide for communication between UE **700** and different systems or devices, which need not necessarily be similar devices. For example, the subsystem **740** may include an infrared device and associated circuits and components or a Bluetooth™ communication module to provide for communication with similarly enabled systems and devices.

[00217] Reference is now made to **Figure 8**. **Figure 8** is a block diagram of a communication system **800** that includes a UE **802** which communicates through the wireless communication network.

[00218] UE **802** communicates wirelessly with one or multiple Node Bs **806**. Each Node B **806** is responsible for air interface processing and some radio resource management functions. Node B **806** provides functionality similar to a Base Transceiver Station in a GSM/GPRS networks.

[00219] The wireless link shown in communication system **800** of **Figure 8** represents one or more different channels, typically different radio frequency (RF) channels, and associated protocols used between the wireless network and UE **802**. A Uu air interface **804** is used between UE **802** and Node B **806**.

[00220] An RF channel is a limited resource that must be conserved, typically due to limits in overall bandwidth and a limited battery power of UE **802**. Those skilled in art will appreciate that a wireless network in actual practice may include hundreds of cells depending upon desired overall expanse of network coverage. All pertinent components may be connected by multiple switches and routers (not shown), controlled by multiple network controllers.

[00221] Each Node B **806** communicates with a radio network controller (RNC) **810**. The RNC **810** is responsible for control of the radio resources in its area. One RNC **810** controls multiple Node Bs **806**.

[00222] The RNC **810** in UMTS networks provides functions equivalent to the Base Station Controller (BSC) functions in GSM/GPRS networks. However, an RNC

810 includes more intelligence, including, for example, autonomous handovers management without involving MSCs and SGSNs.

[00223] The interface used between Node B **806** and RNC **810** is an Iub interface **808**. An NBAP (Node B application part) signaling protocol is primarily used, as defined in 3GPP TS 25.433 V3.11.0 (2002-09) and 3GPP TS 25.433 V5.7.0 (2004-01).

[00224] Universal Terrestrial Radio Access Network (UTRAN) **820** comprises the RNC **810**, Node B **806** and the Uu air interface **804**.

[00225] Circuit switched traffic is routed to Mobile Switching Centre (MSC) **830**. MSC **830** is the computer that places the calls, and takes and receives data from the subscriber or from PSTN (not shown).

[00226] Traffic between RNC **810** and MSC **830** uses the Iu-CS interface **828**. Iu-CS interface **828** is the circuit-switched connection for carrying (typically) voice traffic and signaling between UTRAN **820** and the core voice network. The main signaling protocol used is RANAP (Radio Access Network Application Part). The RANAP protocol is used in UMTS signaling between the Core Network **821**, which can be a MSC **830** or SGSN **850** (defined in more detail below) and UTRAN **820**. RANAP protocol is defined in 3GPP TS 25.413 V3.11.1 (2002-09) and TS 25.413 V5.7.0 (2004-01).

[00227] For all UEs **802** registered with a network operator, permanent data (such as UE **802** user's profile) as well as temporary data (such as UE's **802** current location) are stored in a home location registry (HLR) **838**. In case of a voice call to UE **802**, HLR **838** is queried to determine the current location of UE **802**. A Visitor Location Register (VLR) **836** of MSC **830** is responsible for a group of location areas and stores the data of those mobile stations that are currently in its area of responsibility. This includes parts of the permanent mobile station data that have been transmitted from HLR **838** to the VLR **836** for faster access. However, the VLR **836** of MSC **830** may also assign and store local data, such as temporary identifications. UE **802** is also authenticated on system access by HLR **838**.

[00228] Packet data is routed through Service GPRS Support Node (SGSN) **850**. SGSN **850** is the gateway between the RNC and the core network in a GPRS/UMTS

network and is responsible for the delivery of data packets from and to the UEs within its geographical service area. Iu-PS interface **848** is used between the RNC **810** and SGSN **850**, and is the packet-switched connection for carrying (typically) data traffic and signaling between the UTRAN **820** and the core data network. The main signaling protocol used is RANAP (described above).

[00229] The SGSN **850** communicates with the Gateway GPRS Support Node (GGSN) **860**. GGSN **860** is the interface between the UMTS/GPRS network and other networks such as the Internet or private networks. GGSN 860 is connected to a public data network PDN **870** over a Gi interface.

[00230] Those skilled in art will appreciate that wireless network may be connected to other systems, possibly including other networks, not explicitly shown in **Figure 8.** A network will normally be transmitting at very least some sort of paging and system information on an ongoing basis, even if there is no actual packet data exchanged. Although the network consists of many parts, these parts all work together to result in certain behaviours at the wireless link.

[00231] **Figure 11** illustrates a representation, shown generally at **1102**, representative of operation of the UE pursuant to multiple, concurrent packet data communication service sessions. Here, two packet data services, each associated with a particular PDP context designated as PDP_1 and PDP_2 are concurrently active. The plot **1104** represents the PDP context activated to the first packet data service, and the plot **1106** represents the radio resource allocated to the first packet data service. And, the plot **1108** represents the PDP context activated to the second packet data service, and the plot **1112** represents the radio resource allocated to the second packet data service. The UE requests radio access bearer allocation by way of a service request, indicated by the segments **1114**. And, the UE also requests radio bearer service release, indicated by the segments **1116** pursuant to an embodiment of the present disclosure. The service requests and service releases for the separate services are independent of one another, that is to say, are generated independently. In the exemplary illustration of **Figure 11**, the PDP context and the radio resource for the associated PDP context are assigned at substantially concurrent times. And, the radio resource release is granted upon request by the UE, as shown, or when the RNC (Radio Network Controller) decides to release the radio resource.

[00232] Responsive to a radio resource release request, or other decision to release the radio resource, the network selectably tears down the radio resource associated with the packet data service. Radio release requests are made on a radio access bearer-by-radio access bearer basis and not on an entire signaling connection basis, thereby permitting improved granularity control of resource allocation.

[00233] In the exemplary implementation, a single packet data service is further formable as a primary service and one or more secondary services, such as indicated by the designations **1118** and **1122**. The radio resource release is further permitting of identifying which of one or more primary and secondary services whose radio resource allocations are no longer needed, or otherwise are desired to be released. Efficient radio resource allocation is thereby provided. In addition, optimal utilization of the processor on the UE is provided since the processor power that would have been allocated to unnecessary processing can now be better utilized for other purposes.

[00234] **Figure 12** illustrates parts of the communication system **800**, namely, the UE **802** and the radio network controller (RNC)/SGSN **810/850** that operate pursuant to an embodiment of the present disclosure pertaining to the multiple, contiguous packet data service sessions. The UE includes apparatus **1126** and the RNC/SGSN includes apparatus **1128** of an embodiment of the present disclosure. The elements forming the apparatus **1126** and **1128** are functionally represented, implementable in any desired manner, including by algorithms executable by processing circuitry as well as hardware or firmware implementations. The elements of the apparatus **1128**, while represented to be embodied at the RNC/SGSN, are, in other implementations, formed elsewhere at other network locations, or distributed across more than one network location.

[00235] The apparatus **1126** includes a detector **1132** and a transition indication sender **1134**. In one exemplary implementation, the elements **1132** and **1134** are embodied at a session management layer, e.g., the Non-Access Stratum (NAS) layer defined in UMTS, of the UE.

[00236] In another exemplary implementation, the elements are embodied at an Access Stratum (AS) sublayer. When implemented at the AS sublayer, the elements are implemented as part of a connection manager, shown at **1136**. When

implemented in this manner, the elements need not be aware of the PDP context behavior or of the application layer behavior.

[00237] The detector detects when a determination is made to send a transition indication associated with a packet communication service. The determination is made, e.g., at an application layer, or other logical layer, and provided to the session management layer and the detector embodied thereat. Indications of detections made by the detector are provided to the radio resource release indication sender. The sender generates and causes the UE to send a transition indication that forms the service release request **1116**, shown in **Figure 11**.

[00238] In a further implementation, the transition indication includes a cause field containing a cause, such as any of the aforementioned causes described here and above, as appropriate or the cause field identifies a preferred state into which the UE prefers the network to cause the UE to be transitioned.

[00239] The apparatus **1128** embodied at the network includes an examiner **1142** and a grantor **1144**. The examiner examines the transition indication, when received thereat. And, the transition grantor **1144** operates selectably to transition the UE as requested in the transition indication.

[00240] In an implementation in which the signaling is performed at a radio resource control (RRC) layer, the radio network controller (RNC), rather than the SGSN performs the examination and transitioning of the UE. And, correspondingly, the apparatus embodied at the UE is formed at the RRC layer, or the apparatus otherwise causes the generated indication to be sent at the RRC level.

[00241] In an exemplary control flow, a higher layer informs the NAS/RRC layer, as appropriate, that the radio resource is allocated to a particular PDP context is no longer required. An RRC-layer indication message is sent to the network. The message includes an RAB ID or RB ID that, e.g., identifies the packet data service, to the radio network controller. And, in response, operation of the radio network controller triggers a procedure to resolve to end the radio resource release, radio resource reconfiguration, or radio resource control (RRC) connection release message to be returned to the UE. The RNC procedure is, e.g., similar, or equivalent to, the procedure set forth in 3GPP document TS 23.060, Section 9.2.5. The RAB ID is, e.g., advantageously utilized as the ID is the same as the Network Service Access

Point Identifier (NSAPI) which identifies the associated PDP context, and application layers are generally aware of the NSAPI.

[00242] In a specific example, a radio resource release indication formed at, or otherwise provided to the RRC layer, and sent at the RRC layer is represented, together with associated information, below. The indication when embodied at the RRC layer is also referred to as, e.g., a radio resource release indication.

Information Element/Group name	Need	Multi	IE type and reference	Semantics description
Message Type	MP		Message type	
UE Information Elements				
Integrity check info	CH		Integrity check info	
RAB Information				
RAB List for release indication	MP	1 to maxRABIDs		
> RAB ID for release indication	MP		RAB ID	
Preferred RRC state	OP		RRC state	

[00243] **Figure 13** illustrates a message sequence diagram, shown generally at **1137**, representing exemplary signaling generated pursuant to release of radio resources associated with a PDP context, such as that shown graphically in part of the graphical representation shown in **Figure 11**. Release is initiated either by the UE or at the RNC, or other UTRAN entity. When initiated at the UE, e.g., the UE sends a radio resource release indication to the UTRAN.

[00244] Upon initiation, a radio access bearer (RAB) release request is generated, and sent, indicated by the segment **1138** by the RNC/UTRAN and delivered to the SGSN. In response, an RAB assignment request is returned, indicated by the segment **1140**, to the RNC/UTRAN. And, then, as indicated by the segment **1142**, the radio resources extending between the UE **802** and the UTRAN are released. A response is then sent, as indicated by segment **1144**.

[00245] **Figure 14** illustrates a message sequence diagram shown generally at **1147**, similar to the message sequence diagram shown in **Figure 13**, but here in which resources of a final PDP context are released. Upon initiation, the RNC generates an Iu release request **1150** is communicated to the SGSN and responsive thereto, the SGSN returns an Iu release command, indicated by the segment **1152**. Thereafter, and as indicated by the segments **1154**, the radio bearer formed between the UE and the UTRAN is released. And, as indicated by the segment **1156**, the RNC/UTRAN returns an Iu release complete to the SGSN.

[00246] **Figure 15** illustrates a method flow diagram, shown generally at **1162**, representative of the process of an embodiment of the present disclosure to release radio resources allocated pursuant to a PDP context.

[00247] After start of the process, indicated by the block **1164**, a determination is made, indicated by the decision block **1166** as to whether a radio resource release indication has been received. If not, the no branch is taken to the end block **1168**.

[00248] If, conversely, a radio access bearer release has been requested, the yes branch is taken to the decision block **1172**. At the decision block **1172**, a determination is made as to whether the radio access bearer that is to be released is the final radio access bearer to be released. If not, the no branch is taken to the block **1178**, and the preferred state is set. Then radio access bearer release procedures are performed, such as that shown in **Figure 13** or such as that described in 3GPP document Section 23.060, subclause 9.2.5.1.1.

[00249] Conversely, if a determination is made at the decision block **1172** that the RAB is the last to be released, the yes branch is taken to the block **1186**, an Iu release procedure, such as that shown in **Figure 14** or such as that described in 3GPP document section 23.060, subclause 9.2.5.1.2 is performed.

[00250] **Figure 16** illustrates a method flow diagram, shown generally at **1192**, representative of the process of an embodiment of the present disclosure to release radio resources allocated pursuant to a PDP context.

[00251] After start of the process, indicated by the block **1194**, a determination is made, indicated by the decision block **1196** as to whether there is an RAB (Radio Access Bearer) to release. If not, the no branch is taken to the end block **1198**.

[00252] If, conversely, a radio access bearer release has been requested, the yes branch is taken to the decision block **1202**. At the decision block **1202**, a determination is made as to whether the radio access bearer that is to be released is the final radio access bearer to be released. If not, the no branch is taken to the block **1204**, where the RAB list is set, block **1206** where the preferred state is set, and block **1208** where radio access bearer release procedures are performed, such as that shown in **Figure 13** or such as that described in 3GPP document Section 23.060, subclause 9.2.5.1.1.

[00253] Conversely, if a determination is made at the decision block **1202** that the RAB is the last to be released, the yes branch is taken to the block **1212**, and the domain is set to PS (Packet Switched). Then, as indicated by block **1214**, a release cause is set. And, as indicated by the block **1216**, a SIGNALING CONNECTION RELEASE INDICATION is sent on a DCCH. An Iu release procedure, such as that shown in **Figure 14** or such as that described in 3GPP document section 23.060, subclause 9.2.5.1.2 is performed.

[00254] **Figure 17** illustrates a method, shown generally at **1224**, representative of the method of operation of an embodiment of the present disclosure. The method facilitates efficient utilization of radio resources in a radio communication system that provides for concurrent running of a first packet service and a second packet service. First, and as indicated by the block **1226**, detection is made of selection to release a radio resource associated with a selected packet service of the first packet service and the second packet service. Then, and as indicated by the block **1228**, a radio resource release indication is sent responsive to the detection of the selection to release the radio resource.

[00255] Then, at block **1212** the radio resource release indication is examined and then at block **1214** the grant of the release of the radio bearer is selectably granted.

[00256] In a further embodiment, the network may initiate a transition based on both the receipt of an indication from the user equipment or another network element and on a radio resource profile for the user equipment.

[00257] An indication as received from the user equipment or other network element could be any of the different transition indications described above. The

indication can be passive and thus be merely a blank indication that a less battery intensive radio state should be entered. Alternatively the indication could be part of the regular indications sent from the UE which the network determines, possibly over time or a number of received indications, and the UE's radio resource profile that a less battery or radio resource intensive radio state should be entered. Alternatively, the indication could be dynamic and provide information to the network element about a preferred state or mode in which to transition. As with the above, the indication could contain a cause for the indication (e.g. normal or abnormal). In a further embodiment, the indication could provide other information about a radio resource profile, such as a probability that the user equipment is correct about the ability to transition to a different state or mode, or information about the application(s) that triggered the indication.

[00258] An indication from another network element could include, for example, an indication from a media or push-to-talk network entity. In this example, the indication is sent to the network entity responsible for transitioning (e.g. the UTRAN) when traffic conditions allow. This second network entity could look at traffic at an Internet protocol (IP) level to determine whether and when to send a transition indication.

[00259] In a further embodiment, the indication from the UE or second network element could be implicit rather than explicit. For example, a transition indication may be implied by the network element responsible for transitioning (e.g. the UTRAN) from device status reports on outbound traffic measurements. Specifically, status reporting could include a radio link buffer status where, if no outbound data exists, could be interpreted as an implicit indication. Such status reporting could be a measurement that can be repetitively sent from the UE that does not, by itself, request or indicate anything.

[00260] The indication could thus be any signal and could be application based, radio resource based, or a composite indication providing information concerning all of the user equipment's application and radio resources. The above is not meant to be limiting to any particular indication, and one skilled in the art would appreciate that any indication could be used with the present method and disclosure.

[00261] Reference is now made to **Figure 18**. The process starts at step **1801** and proceeds to step **1810** in which a network element receives the indication.

[00262] Once the network receives the indication in step **1810**, the process proceeds to step **1820** in which a radio resource profile for the user equipment is optionally checked.

[00263] The term "radio resource profile", as used herein, is meant to be a broad term that could apply to a variety of situations, depending on the requirements of a network element. In broad terms, the radio resource profile includes information about radio resources utilized by the user equipment.

[00264] The radio resource profile could include either or both static profile elements and dynamic or negotiated profile elements. Such elements could include an "inhibit duration and/or maximum indication/request messages per time-window" value, which could be part of the radio resource profile, either within or apart from the transition profile, and could be negotiated or static.

[00265] Static profile elements may include one or more of the quality of service for a radio resource (e.g. RAB or RB), a PDP context, an APN that the network has knowledge of and a subscriber profile.

[00266] As will be appreciated by those skilled in the art, various levels of quality service could exist for a radio resource and the level of the quality of service could provide information to a network on whether to transition to a different state or mode. Thus if the quality of service is background, the network element may consider transitioning to idle more readily than if the quality of service is set to interactive. Further, if multiple radio resources have the same quality of service, this could provide an indication to the network on whether to transition the mobile device to a more suitable state or mode or to tear down the radio resources. In some embodiments, a primary and secondary PDP context could have a different quality of service, which could also affect the decision on whether to perform a state/mode transition.

[00267] Further, the APN could provide the network with information about the typical services that the PDP context utilizes. For example, if the APN is xyz.com, where xyz.com is typically used for the provision of data services such as email, this could provide an indication to the network about whether or not to transition to a different state or mode. This could further indicate routing characteristics.

[00268] In particular, the present method and apparatus can utilize the Access Point Name (APN) specified by the UE to set the transition profile between various states. This may be another way of describing the subscription of the UE. As will be appreciated, the Home Location Register (HLR) may store relevant information about subscribers, and could provide the radio network controller (RNC) with the subscription of the UE. Other network entities could also be used to store subscription information centrally. Whether using the HLR or other network entity, information is preferably pushed to other network components such as the RNC and SGSN, which map subscription information to relevant physical parameters used during data exchange.

[00269] The UTRAN could include or have access to a database or table in which various APNs or QoS parameters could be linked to a specific transition profile. Thus, if the UE is an always on device, this will be apparent from the APN and an appropriate transition profile for that APN could be stored at the UTRAN as part of the radio resource profile or be remotely accessible by the UTRAN. Similarly, if the QoS or a portion of the QoS parameter is used, or a dedicated message sent with a profile, this could signify to the UTRAN that a particular transition profile is desired based on a database query or a lookup in a table. Additionally, a multiplicity of behaviors beyond the RRC connected state transition profile can be specified by this means. These include, but are not limited to:

rate adaptation algorithms (periodicity of step/step size);
initial granted radio bearer;
maximal granted radio bearer;
minimize call setup time (avoid unnecessary steps such as traffic volume measurements); and
the air interface (GPRS/EDGE/UMTS/HSDPA/HSUPA/LTE, etc.).

[00270] Further, if there are multiple PDP contexts that have different QoS requirement but share the same APN IP address, such as a primary context, secondary context, and so forth, a different transition profile can be used for each context. This could be signaled to the UTRAN through QoS or dedicated messages.

[00271] If multiple active PDP contexts are concurrently utilized, the lowest common denominator between the contexts can be used. For RRC state transition, if one application has a first PDP context that is associated with a transition profile in which the system moves from CELL_DCH state to a CELL_PCH or Idle state quickly,

and a second PDP context is associated with a transition profile in which the system is to stay in the CELL_DCH state longer, the second profile in which the CELL_DCH state is maintained longer will override the first profile.

[00272] As will be appreciated by those skilled in the art, the lowest common denominator can be considered in two different ways. Lowest common denominator, as used herein, implies a longest time required before transitioning to a different state. In a first embodiment, the lowest common denominator may be the lowest of the activated PDPs. In an alternative embodiment, the lowest common denominator may be the lowest of the PDPs that actually have active radio resources. The radio resources could be multiplexed in a number of different fashions but the end result is the same.

[00273] An exemplary case for such methods can be drawn for always on devices. As described, various APNs or QoS parameters can be linked to a specific behavior for always on. Consider initially granted radio resources that may be desirable based on an 'always on' profile. The network now has a means to 'know' that data bursts are short and bursty for always-on applications, such as email. For those skilled in the art, it is clearly seen that given this information, there is no incentive to save code space for trunking efficiency on the network. Thus a maximum rate may be allocated to an always-on device with little risk of not reserving enough code space for other users. Additionally the UE benefits in receiving data more rapidly and also saves on battery life due to shorter 'on time'. Again, to those skilled in the art, high data rates have very little effect on current draw since power amplifiers are fully biased regardless of data rate.

[00274] In the above embodiment, a lookup table can be used by the UTRAN to determine the resource control profile for radio resources(s) to be assigned for different applications for a given RRC connection for the UE. The profile can be based on user subscription and stored on the network side at a network entity such as HLR or alternatively at the RNC since the RNC will have more up to date traffic resources available (i.e. data rates that can be granted). If higher data rates can be achieved shorter timeouts may be possible.

[00275] Instead of APN, other alternatives such the Quality of Service (QoS) parameters set in a Packet Data Protocol (PDP) Context activation or Modified PDP Context can be used. The QoS field can further include the QoS "allocation retention

priority (Service data unit could be used to infer traffic data volumes)" in case of multiple PDP contexts sharing the same APN address or a subscription profile to set the transition profile. Further alternatives include dedicated messages such as the indication message above to signal a resource control profile and information such as inhibit duration and/or maximum indication/request messages per time-window value.

[00276] The transition profile included in the radio resource profile could further include whether the state of the UE should be transition at all based on the type of application. Specifically, if the user equipment is being used as a data modem, a preference may be set either on the user equipment so transition indications are not sent or if knowledge of the preference is maintained at the network, that any transition indication received from the UE while being used as a data modem should be ignored. Thus the nature of the applications that are being run on the user equipment could be used as part of the radio resource profile.

[00277] A further parameter of a transition profile could involve the type of transition. Specifically, in a UMTS network, the user equipment may prefer to enter a Cell_PCH state rather than entering an idle state for various reasons. One reason could be that the UE needs to connect to a Cell_DCH state more quickly if data needs to be sent or received, and thus moving to a Cell_PCH state will save some network signaling and battery resources while still providing for a quick transition to the Cell_DCH state. The above is equally applicable in non-UMTS networks and may provide for a transition profile between various connected and idle states.

[00278] The transition profile may also include various timers including, but not limited to, inhibit duration and/or maximum indication/request messages per time-window, delay timers and inactivity timers. Delay timers provide a period which the network element will wait prior to transitioning to a new state or mode. As will be appreciated, even if the application has been inactive for a particular time period, a delay may be beneficial in order to ensure that no further data is received or transmitted from the application. An inactivity timer could measure a predetermined time period in which no data is received or sent by an application. If data is received prior to the inactivity timer expiring, typically the inactivity timer will be reset. Once the inactivity timer expires, the user equipment may then send the indication of step **1810** to the network. Alternatively, the user equipment may wait for a certain period, such as that defined for the delay timer, before sending the indication of step **1810**.

[00279] Further, the delay timer or inhibit duration and/or maximum indication/request messages per time-window could vary based on a profile that is provided to the network element. Thus, if the application that has requested a transition to a different mode or state is a first type of application, such as an email application, the delay timer on the network element can be set to a first delay time, while if the application is of a second type such as an instant messaging application, the delay timer can be set to a second value. The values of the inhibit duration and/or maximum indication/request messages per time-window, delay timer or inactivity timer could also be derived by the network based on the APN utilized for a particular PDP.

[00280] As will be appreciated by those skilled in the art, the inactivity timer could similarly vary based on the application utilized. Thus, an email application may have a shorter inactivity timer than a browser application since the email application is expecting a discrete message after which it may not receive data. Conversely the browser application may utilize data even after a longer delay and thus require a longer inactivity timer.

[00281] The transition profile may further include a probability that a user equipment is correct requesting a transition. This could be based on compiled statistics on the rate of accuracy of a particular user equipment or application on the user equipment.

[00282] The transition profile may further include various discontinuous reception (DRX) time values. Further, a progression profile for DRX times could be provided in a transition profile.

[00283] The transition profile could be defined on an application by application basis or be a composite of the various applications on the user equipment.

[00284] As will be appreciated by those skilled in the art the transition profile could be created or modified dynamically when a radio resource is allocated and could be done on subscription, PS registration, PDP activation, RAB or RB activation or changed on the fly for the PDP or RAB/RB. The transition profile could also be part of the indication of step **1810**. In this case, the network may consider the preferred RRC state indication to determine whether to allow the transition and to what

state/mode. Modification could occur based on available network resources, traffic patterns, among others.

[00285] The radio resource profile is therefore comprised of static and/or dynamic fields. The radio resource profile used by a particular network may vary from other networks and the description above is not meant to limit the present method and system. In particular, the radio resources profile could include and exclude various elements described above. For example, in some cases the radio resource profile will merely include the quality of service for a particular radio resource and include no other information. In other cases, the radio resource profile will include only the transition profile. Still in other cases, the radio resource profile will include all of the quality of service, APN, PDP context, transition profile, among others.

[00286] Optionally, in addition to a radio resource profile, the network element could also utilize safeguards to avoid unnecessary transitions. Such safeguards could include, but are not limited to, the number of indications received in a predetermined time period, the total number of indications received, traffic patterns and historical data.

[00287] The number of indications received in a predetermined time period could indicate to the network that a transition should not occur. Thus, if the user equipment has sent, for example, five indications within a thirty second time period, the network may consider that it should ignore the indications and not perform any transitions. Alternatively the network may determine to indicate to the UE that it should not send any further indications either indefinitely or for some configured or predefined time period. This could be independent of any "inhibit duration and/or maximum indication/request messages per time-window" on the UE.

[00288] Further, the UE could be configured not to send further indications for a configured, predefined or negotiated time period. The UE configuration could be exclusive of the safeguards on the network side described above.

[00289] The traffic patterns and historical data could provide an indication to the network that a transition should not occur. For example, if the user has received a significant amount of data in the past between 8:30 and 8:35 a.m. from Monday to Friday, if the indication is received at 8:32 a.m. on Thursday, the network may decide

that it should not transition the user equipment since more data is likely before 8:35 a.m.

[00290] If multiple radio resources are allocated for the user equipment, the network may need to consider the complete radio resource profile for the user equipment. In this case, the radio resource profiles for each radio resource can be examined and a composite transition decision made. Based on the radio resource profile of one or multiple radio resources, the network can then decide whether or not a transition should be made.

[00291] In one embodiment, the network has a plurality of choices on how to proceed when it has received and indication in step **1810** and optionally examined the radio resource profile or profiles in step **1820**.

[00292] A first option is to do nothing. The network may decide that a transition is not warranted and thus not accept the user equipment indication to transition. As will be appreciated by those skilled in the art, doing nothing saves network signaling since the state is not changed and in particular since a transition is not triggered.

[00293] A second option is to change the state of the device. For example, in a UMTS network, the state of the device may change from Cell_DCH to Cell_PCH. In non-UMTS networks the state transition may occur between connected states. As will be appreciated by those skilled in the art, changing states reduces the amount of core network signaling when compared with a transition to idle mode. Changing the state can also save radio resources since the Cell_PCH state does not require a dedicated channel. Also Cell_PCH is less battery intensive state enabling the UE to preserve battery power.

[00294] A third option for the network is to keep the UE in the same state but release the radio resources associated with a particular APN or PDP context. This approach saves radio resources and signaling as the connection is maintained in its current state and does not need to be re-established. However, it may be less suitable for situations where UE battery life is a concern.

[00295] A fourth option for the network is to transition the UE to an Idle mode. In particular, in both UMTS and non-UMTS, the network may move from a connected mode to an Idle mode. As will be appreciated, this saves radio resources since no

connection at all is maintained. It further saves the battery life on the user equipment. However, a greater amount of core network signaling is required to reestablish the connection.

[00296] A fifth option for the network is to change a data rate allocation, which will save radio resources, typically allowing more users to use the network.

[00297] Other options would be evident to those skilled in the art.

[00298] The decision of the network on which of the five or more options to utilize will vary from network to network. Some overloaded networks may prefer to preserve radio resources and thus would choose the third, fourth or fifth options above. Other networks prefer to minimize signaling and thus may choose the first or second options above.

[00299] The decision is shown in **Figure 18** at step **1830** and may be based on network preferences along with the radio resource profile for the user equipment. The decision is triggered by the network receiving an indication from the user equipment that the user equipment would like to transition into another state e.g. into a less battery intensive state.

[00300] Reference is now made to **Figure 19**. **Figure 19** illustrates the simplified network element adapted to make the decisions shown in **Figure 18** above. Network element **1910** includes a communications subsystem **1920** adapted to communicate with user equipment. As will be appreciated by those skilled in the art communications subsystem **1920** does not need to directly communicate with user equipment, but could be part of a communications path for communications to and from the user equipment.

[00301] Network element **1910** further includes a processor **1930** and a storage **1940**. Storage **1940** is adapted to store preconfigured or static radio resource profiles for each user equipment being serviced by network element **1910**. Processor **1930** is adapted to, upon receipt of an indication by communications subsystem **1920**, consider the radio resource profile for the user equipment and to decide on a network action regarding transitioning the user equipment. As will be appreciated by those skilled in the art, the indication received by communications subsystem **1920** could further include a portion of or all of the radio resource profile

for the user equipment that would then be utilized by processor **1930** to make the network decision concerning any transition.

[00302] Based on the above, a network element therefore receives an indication from the user equipment that a transition might be in order (such as for example when a data exchange is complete and/or that no further data is expected at the UE). Based on this indication, the network element optionally checks the radio resource profile of the user equipment, which could include both static and dynamic profile elements. The network element may further check safeguards to ensure that unnecessary transitions are not occurring. The network element could then decide to do nothing or to transition to a different mode or state, or to tear down a radio resource. As will be appreciated, this provides the network more control of its radio resources and allows the network to configure transition decisions based on network preferences rather than merely user equipment preferences. Further, in some cases the network has more information than the device concerning whether to transition. For example, the user equipment has knowledge of upstream communications and based on this may decide that the connection may be torn down. However, the network may have received downstream communications for the user equipment and thus realized that it cannot tear down the connection. In this case, a delay can also be introduced using the delay timer to provide the network with more certainty that no data will be received for user equipment in the near future.

[00303] The embodiments described herein are examples of structures, systems or methods having elements corresponding to elements of the techniques of this disclosure. This written description may enable those skilled in the art to make and use embodiments having alternative elements that likewise correspond to the elements of the techniques of this disclosure. The intended scope of the techniques of this disclosure thus includes other structures, systems or methods that do not differ from the techniques of this disclosure as described herein, and further includes other structures, systems or methods with insubstantial differences from the techniques of this disclosure as described herein.

WHAT IS CLAIMED:

1. A method comprising:

reading a system information message received from a network;

determining, at a user equipment, if the system information message includes an inhibit transition indication;

determining, at the user equipment, if no further data is expected; and

if the system information message includes the inhibit transition indication, and if no further data is expected,

transmitting an indication message from the user equipment to the network, the indication message including a cause.

2. The method of claim 1, wherein the inhibit transition indication is an inhibit timer value.

3. The method of claim 2, further comprising if the system information message includes an inhibit timer value, storing the inhibit timer value.

4. The method of claim 3, further comprising using the stored inhibit timer value for an inhibit timer.

5. The method of claim 4, wherein the transmitting occurs if the inhibit timer is not running.

6. The method of claim 4, wherein the transmitting occurs if the inhibit timer has expired.

7. The method of any one of claims 4 to 6, further comprising resetting the inhibit timer upon acquiring a new cell or network.

8. The method of claim 2, wherein the inhibit timer value is a T3xx inhibit timer value.

9. The method of any one of claims 1 to 8, wherein the indication message is a SIGNALING CONNECTION RELEASE INDICATION message.

10. The method of any one of claims 1 to 9, wherein the system information message is received upon the user equipment acquiring a new network or cell.

11. The method of any one of claims 1 to 10, wherein the inhibit transition indication is a T3xx inhibit timer value included in information element "UE timers and constants in connected mode" of a system information block type 1 of the system information message.

12. The method of any one of claims 1 to 11, wherein the cause is indicative of a request by the user equipment to end a PS data session.

13. The method of any one of claims 1 to 12, wherein the cause is set to UE Requested PS Data session end.

14. The method of any one of claims 1 to 13, wherein transmitting the indication message comprises transmitting a signaling connection release indication message on DCCH using AM RLC.

15. The method of claim 1, wherein the system information message is a request to release or abort a signaling connection from an upper layer for a specific Core Network domain.

16. The method of any one of claims 1 to 15, wherein the network is a UMTS Terrestrial Radio Access Network.

17. The method of any one of claims 1 to 16, wherein the cause is an information element of the indication message.

18. The method of any one of claims 1 to 17, wherein the cause is indicative of a request to the network to transition the user equipment to a different state or mode.

19. The method of any one of claims 1 to 18, wherein the cause is indicative of a request to the network to transition the user equipment to a different state or mode independent of any determination by the network concerning a current state or mode of the user equipment.

20. The method of any one of claims 1 to 18, wherein the cause is indicative of a request to the network for a network-controlled transition from a first RRC state or mode to a second RRC state or mode that is a less battery demanding RRC state or mode than the first RRC state or mode.

21. The method of claim 20, wherein the first RRC state or mode is one of a CELL_DCH state, a CELL_FACH state, a CELL_PCH state and a URA_PCH state.

22. The method of claim 20 or 21, wherein the second RRC state or mode is one of a CELL_FACH state, a CELL_PCH state, a URA_PCH state and an idle mode.

23. A user equipment comprising a processor configured to:

read a system information message received from a network;

determine if the system information message includes an inhibit transition indication;

determine if no further data is expected; and

if the system information message includes the inhibit transition indication, and if no further data is expected,

transmit an indication message from the user equipment to the network, the indication message including a cause.

24. The user equipment of claim 23, wherein the inhibit transition indication is an inhibit timer value.

25. The user equipment of claim 24, further configured to store the inhibit timer value if the system information message includes the inhibit timer value.

26. The user equipment of claim 25, further configured to use the stored inhibit timer value for an inhibit timer.

27. The user equipment of claim 26, wherein the transmitting occurs if the inhibit timer is not running.

28. The user equipment of claim 26, wherein the transmitting occurs if the inhibit timer has expired.

29. The user equipment of any one of claims 26 to 28, further configured to reset the inhibit timer upon acquiring a new cell or network.

30. The user equipment of claim 24, wherein the inhibit timer value is a T3xx inhibit timer value.

31. The user equipment of any one of claims 23 to 30, wherein the user equipment is configured to transmit the indication message as a SIGNALING CONNECTION RELEASE INDICATION message.

32. The user equipment of any one of claims 23 to 31, wherein the system information message is received by the user equipment upon the user equipment acquiring a new network or cell.

33. The user equipment of any one of claims 23 to 32, wherein the inhibit transition indication is a T3xx inhibit timer value included in information element "UE timers and constants in connected mode" of a system information block type 1 of the system information message.

34. The user equipment any one of claims 23 to 33, wherein the cause is indicative of a request by the user equipment to end a PS data session.

35. The user equipment of any one of claims 23 to 34, wherein the cause is set to UE Requested PS Data session end.

36. The user equipment of any one of claims 23 to 35, wherein the act of transmitting the indication message comprises the user equipment transmitting a signaling connection release indication message on DCCH using AM RLC.

37. The user equipment of claim 23, wherein the system information message is a request to release or abort a signaling connection from an upper layer for a specific Core Network domain.

38. The user equipment of any one of claims 23 to 37, wherein the network is a UMTS Terrestrial Radio Access Network.

39. The user equipment of any one of claims 23 to 38, wherein the cause is an information element of the indication message.

40. The user equipment of any one of claims 23 to 39, wherein the cause is indicative of a request to the network to transition the user equipment to a different state or mode.

41. The user equipment of any one of claims 23 to 40, wherein the cause is indicative of a request to the network to transition the user equipment to a different state or mode independent of any determination by the network concerning a current state or mode of the user equipment.

42. The user equipment of any one of claims 23 to 40, wherein the cause is indicative of a request to the network for a network-controlled transition from a first RRC state or mode to a second RRC state or mode that is a less battery demanding RRC state or mode than the first RRC state or mode.

43. The user equipment of claim 42, wherein the first RRC state or mode is one of a CELL_DCH state, a CELL_FACH state, a CELL_PCH state and a URA_PCH state.

44. The user equipment of claim 42 or 43, wherein the second RRC state or mode is one of a CELL_FACH state, a CELL_PCH state, a URA_PCH state and an idle mode.

45. A user equipment comprising:

at least one memory for storing instructions; and

a processor for executing the instructions to:

read a system information message received from a network;

determine if the system information message includes an inhibit transition indication,

determine if no further data is expected, and

if the system information message includes the inhibit transition indication and if no further data is expected, effect transmission of an indication message from the user equipment to the network, the indication message including a cause.

46. The user equipment of claim 45, wherein the inhibit transition indication is an inhibit timer value.

47. The user equipment of claim 46, further configured to store the inhibit timer value if the system information message includes the inhibit timer value.

48. The user equipment of claim 47, further configured to use the stored inhibit timer value for an inhibit timer.

49. The user equipment of claim 46, wherein the inhibit timer value is a T3xx inhibit timer value.

50. The user equipment of any one of claims 45 to 49, wherein the inhibit transition indication is a T3xx inhibit timer value included in information element "UE timers and constants in connected mode" of a system information block type 1 of the system information message.

51. The user equipment of any one of claims 45 to 50, wherein the cause is indicative of a request by the user equipment to end a PS data session.

52. The user equipment of any one of claims 45 to 51, wherein the cause is set to UE Requested PS Data session end.

53. The user equipment of any one of claims 45 to 52, wherein the act of transmitting the indication message comprises the user equipment transmitting a signaling connection release indication message on DCCH using AM RLC.

54. The user equipment of claim 45, wherein the system information message is a request to release or abort a signaling connection from an upper layer for a specific Core Network domain.

55. The user equipment of any one of claims 45 to 54, wherein the network is a UMTS Terrestrial Radio Access Network.

56. The user equipment of any one of claims 45 to 55, wherein the cause is an information element of the indication message.

57. The user equipment of any one of claims 45 to 56, wherein the cause is indicative of a request to the network to transition the user equipment to a different state or mode.

58. The user equipment of any one of claims 45 to 57, wherein the cause is indicative of a request to the network to transition the user equipment to a different state or mode independent of any determination by the network concerning a current state or mode of the user equipment.

59. The user equipment of any one of claims 45 to 57, wherein the cause is indicative of a request to the network for a network-controlled transition from a first RRC state or mode to a second RRC state or mode that is a less battery demanding RRC state or mode than the first RRC state or mode.

60. The user equipment of claim 59, wherein the first RRC state or mode is one of a CELL_DCH state, a CELL_FACH state, a CELL_PCH state and a URA_PCH state.

61. The user equipment of claim 59 or 60, wherein the second RRC state or mode is one of a CELL_FACH state, a CELL_PCH state, a URA_PCH state and an idle mode.

62. A user equipment comprising:

means for reading a system information message received from a network;

means for determining if the system information message includes an inhibit transition indication;

means for determining if no further data is expected; and

means for transmitting, if the system information message includes the inhibit transition indication, and if no further data is expected, an indication message from the user equipment to the network, the indication message including a cause.

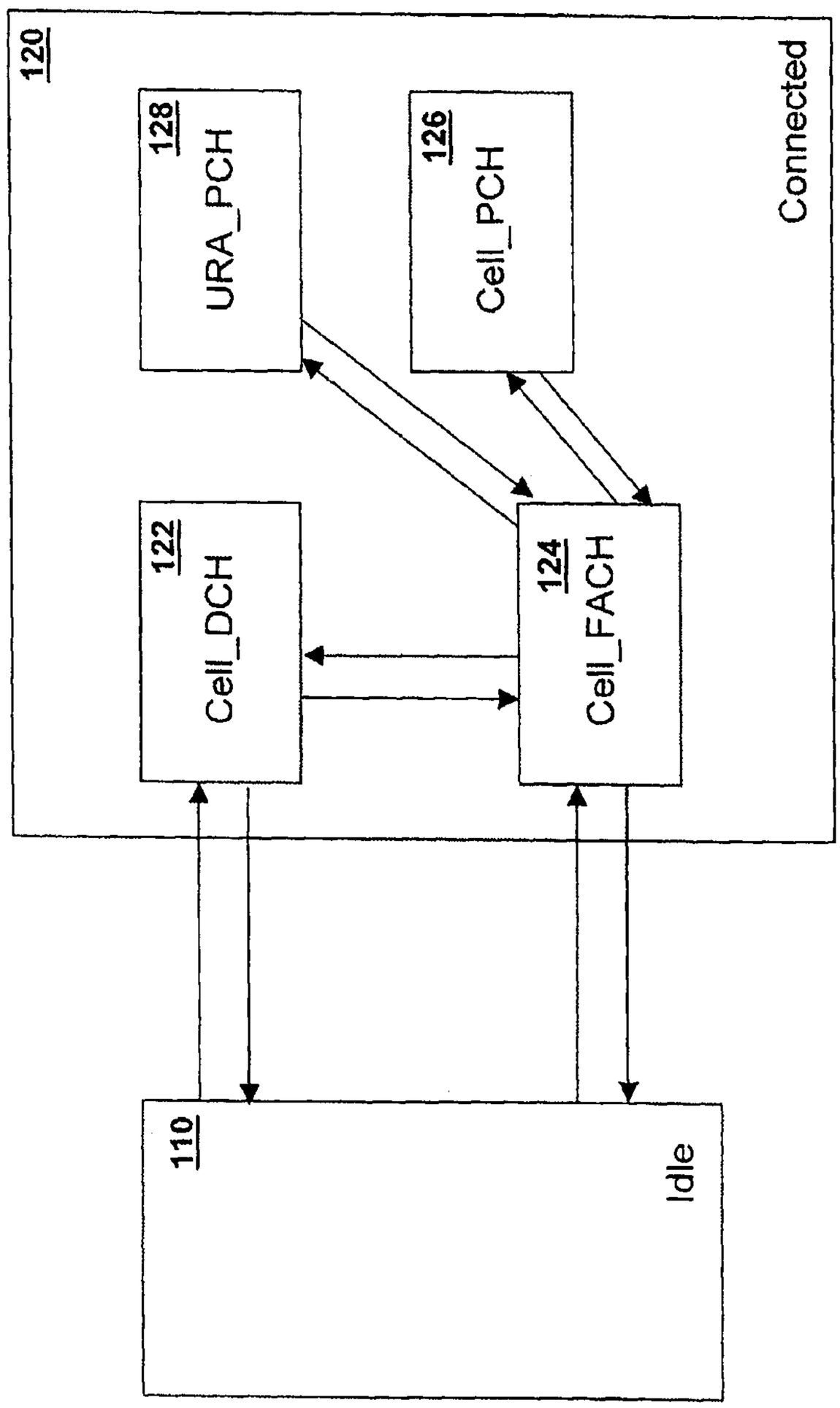
120
Connected
128
URA_PCH
126
Cell_PCH
122
Cell_DCH
124
Cell_FACH
110
Idle

FIG. 1

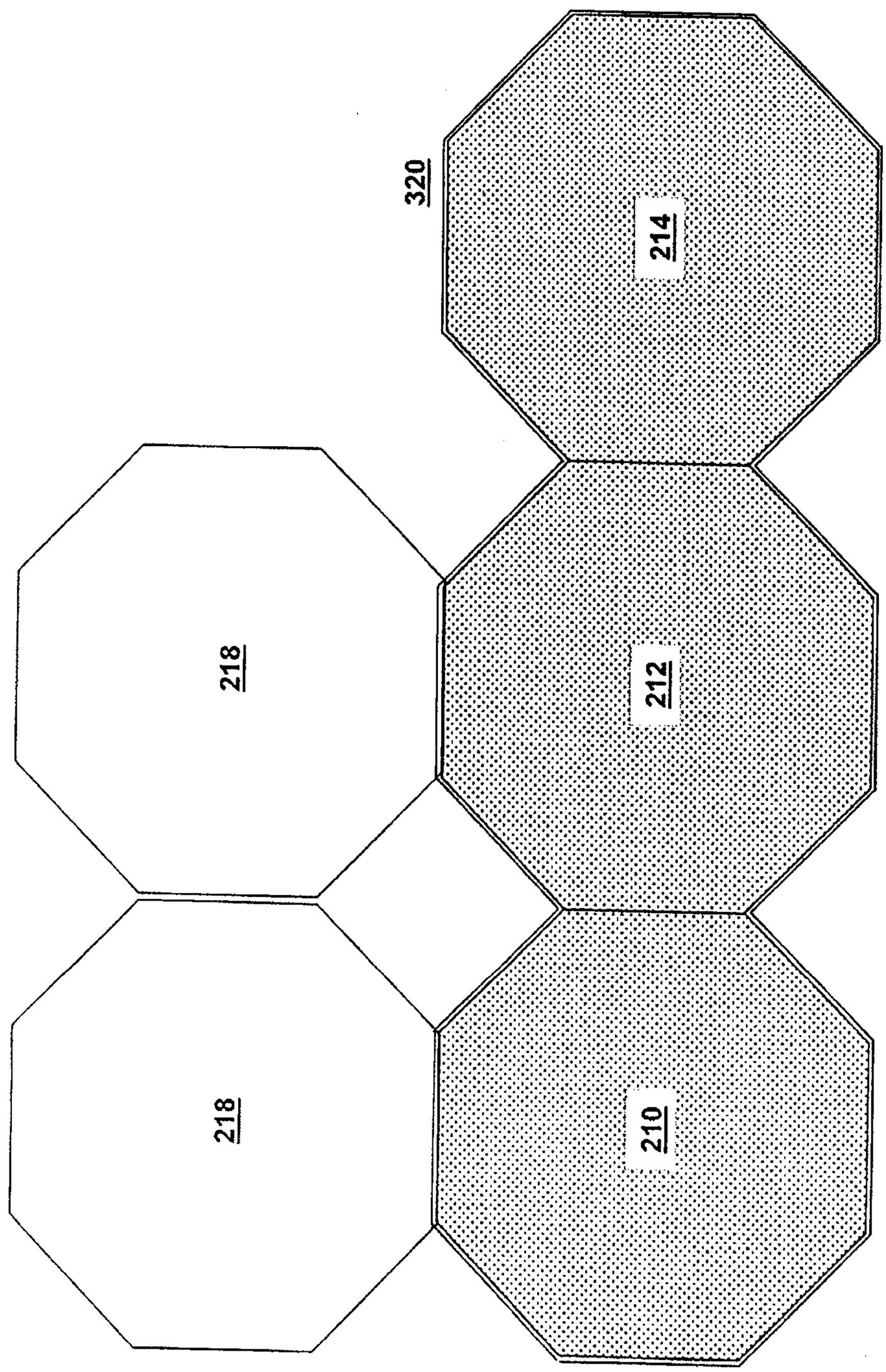

FIG. 2

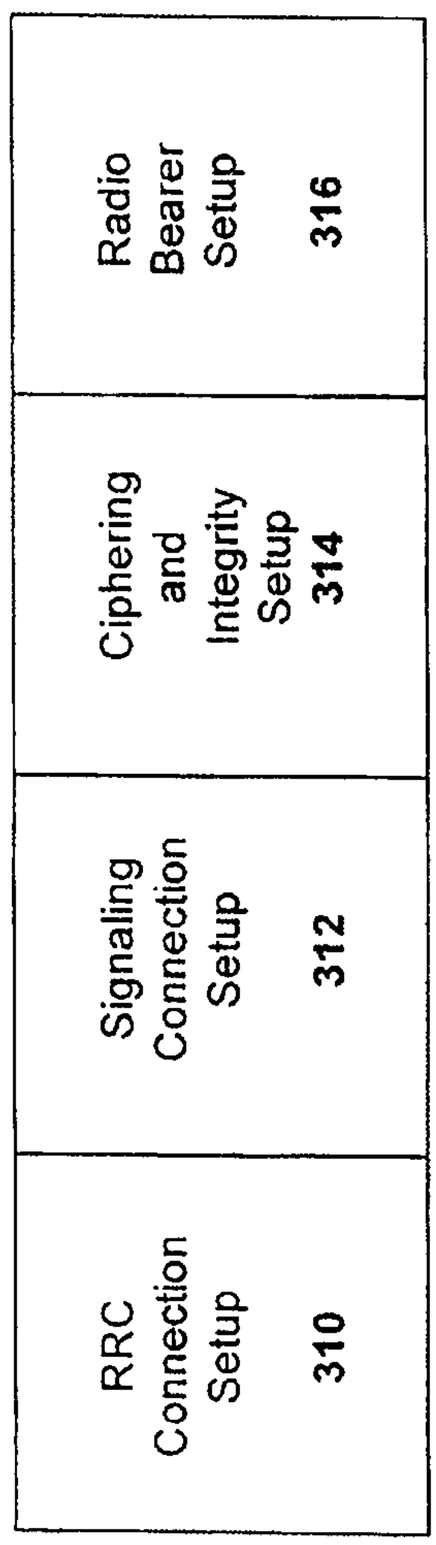
RRC Connection Setup 310
Signaling Connection Setup 312
Ciphering and Integrity Setup 314
Radio Bearer Setup 316

FIG. 3

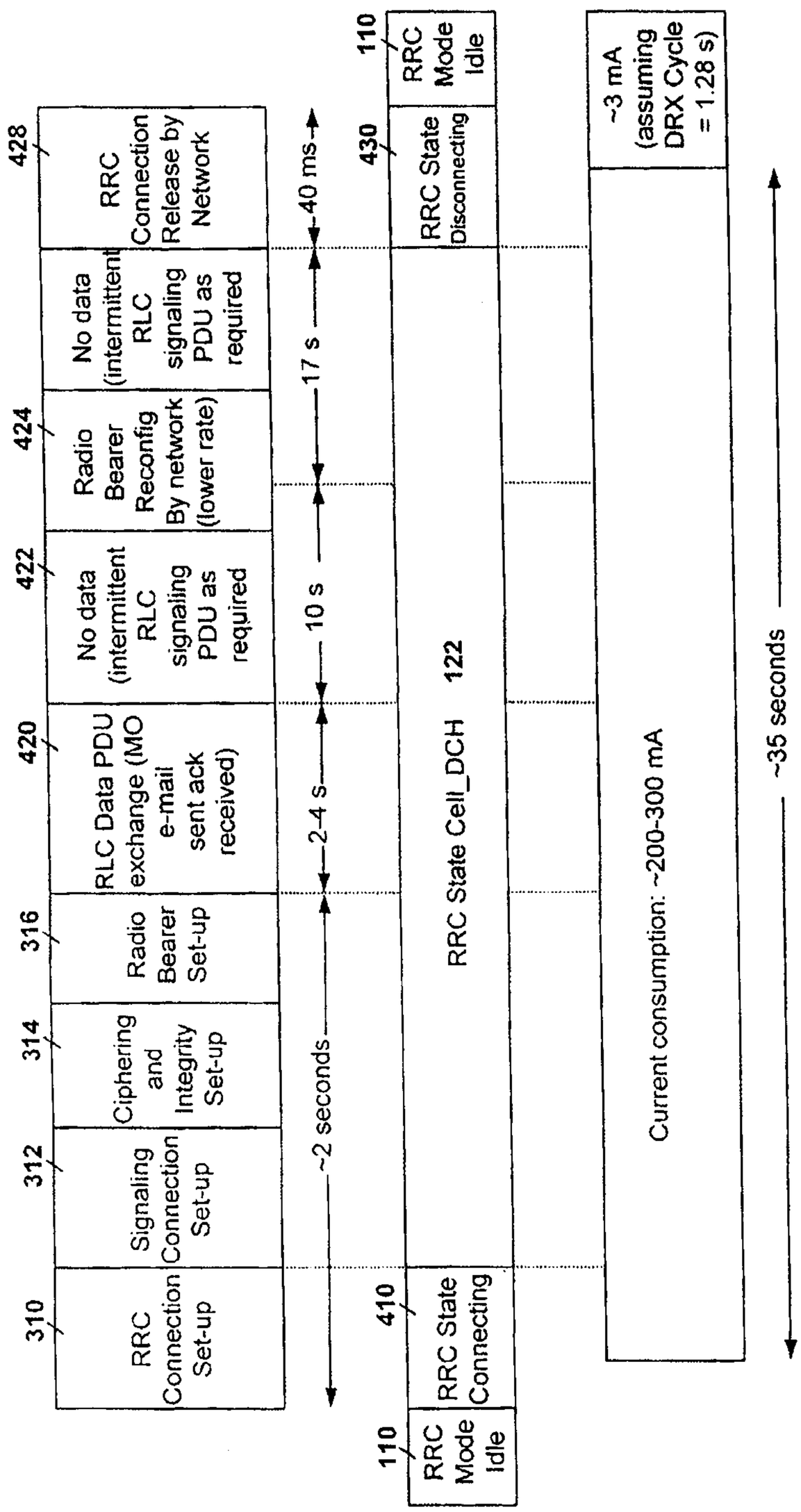
310
RRC Connection Set-up
312
Signaling Connection Set-up
314
Ciphering and Integrity Set-up
316
Radio Bearer Set-up
420
RLC Data PDU exchange (MO e-mail sent ack received)
422
No data (intermittent RLC signaling PDU as required
424
Radio Bearer Reconfig By network (lower rate)
No data (intermittent RLC signaling PDU as required
428
RRC Connection Release by Network
~2 seconds
10 s
2-4 s
17 s
40 ms
410
RRC State Connecting
110
RRC Mode Idle
RRC State Cell_DCH 122
430
RRC State Disconnecting
110
RRC Mode Idle
Current consumption: ~200-300 mA
~3 mA (assuming DRX Cycle = 1.28 s)
~35 seconds

FIG. 4A

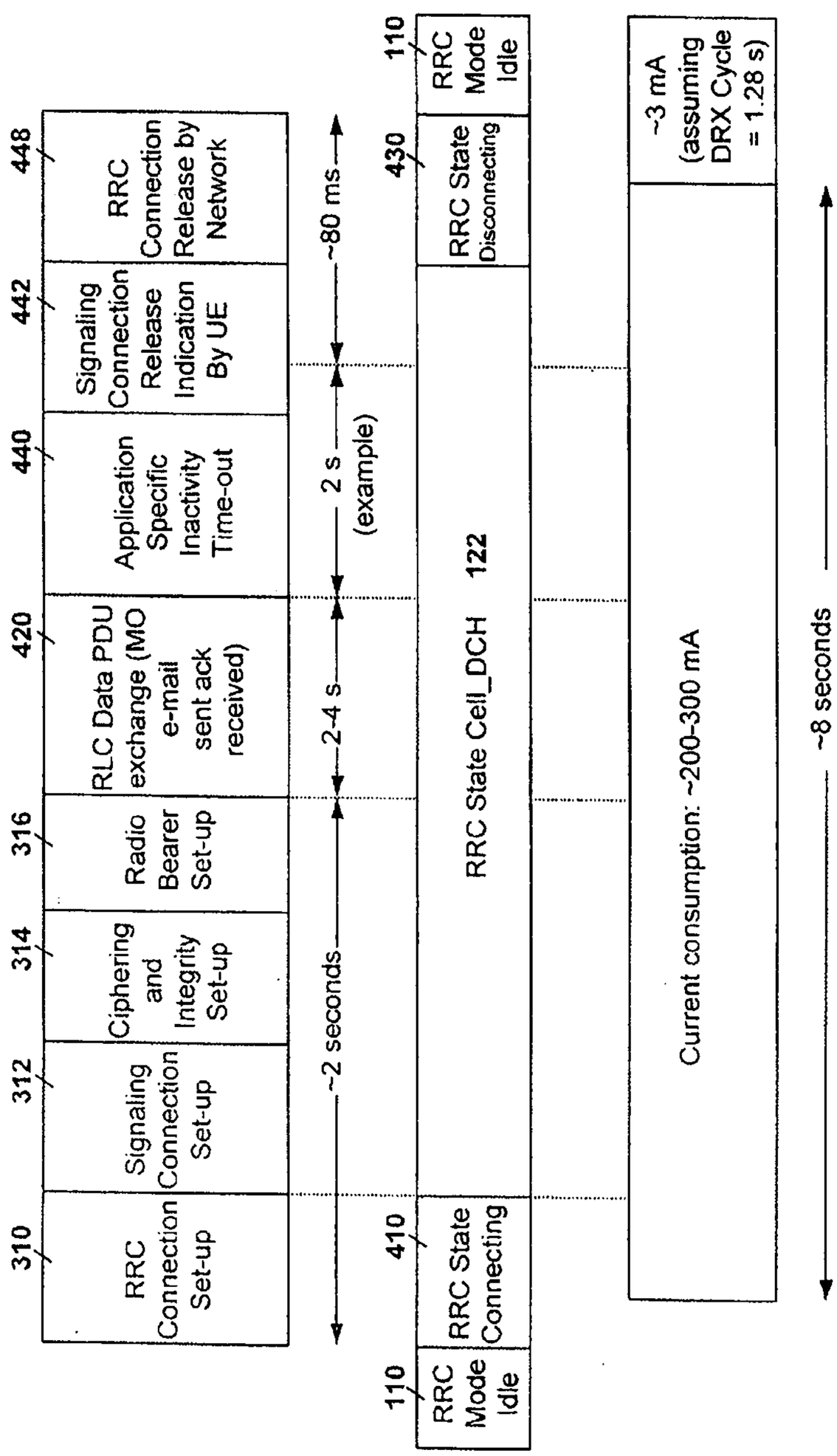
310
RRC Connection Set-up
312
Signaling Connection Set-up
314
Ciphering and Integrity Set-up
316
Radio Bearer Set-up
420
RLC Data PDU exchange (MO e-mail sent ack received)
440
Application Specific Inactivity Time-out
442
Signaling Connection Release Indication By UE
448
RRC Connection Release by Network
110
RRC Mode Idle
410
RRC State Connecting
~2 seconds
2-4 s
2 s (example)
~80 ms
RRC State Cell_DCH
122
Current consumption: ~200-300 mA
~8 seconds
430
RRC State Disconnecting
110
RRC Mode Idle
~3 mA (assuming DRX Cycle = 1.28 s)

FIG. 4B

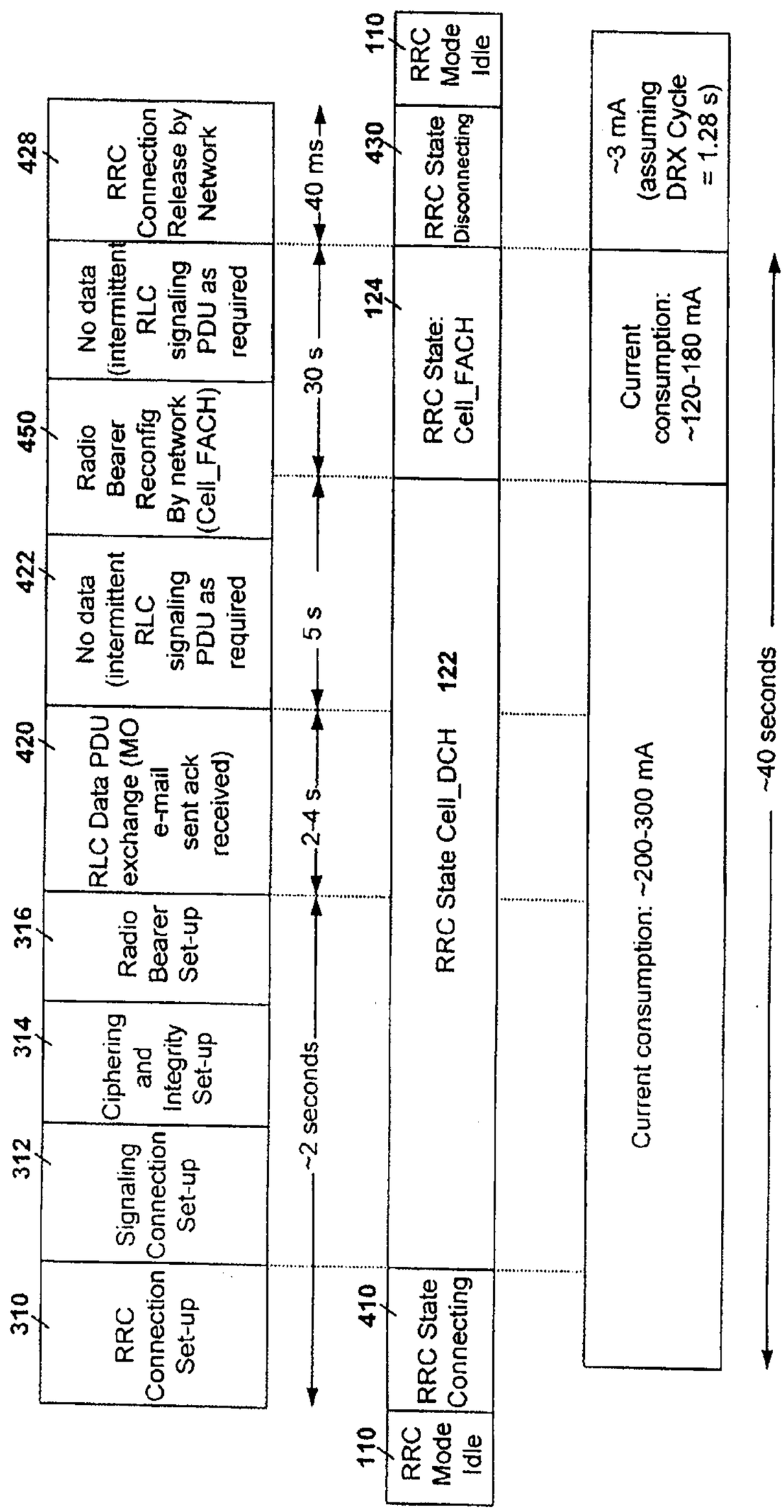
310
RRC Connection Set-up
312
Signaling Connection Set-up
314
Ciphering and Integrity Set-up
316
Radio Bearer Set-up
420
RLC Data PDU exchange (MO e-mail sent ack received)
422
No data (intermittent RLC signaling PDU as required
450
Radio Bearer Reconfig By network (Cell_FACH)
No data (intermittent RLC signaling PDU as required
428
RRC Connection Release by Network
~2 seconds
2-4 s
5 s
30 s
40 ms
410
RRC State Connecting
110
RRC Mode Idle
RRC State Cell_DCH 122
124
RRC State: Cell_FACH
430
RRC State Disconnecting
110
RRC Mode Idle
Current consumption: ~200-300 mA
Current consumption: ~120-180 mA
~3 mA (assuming DRX Cycle = 1.28 s)
~40 seconds

FIG. 5A

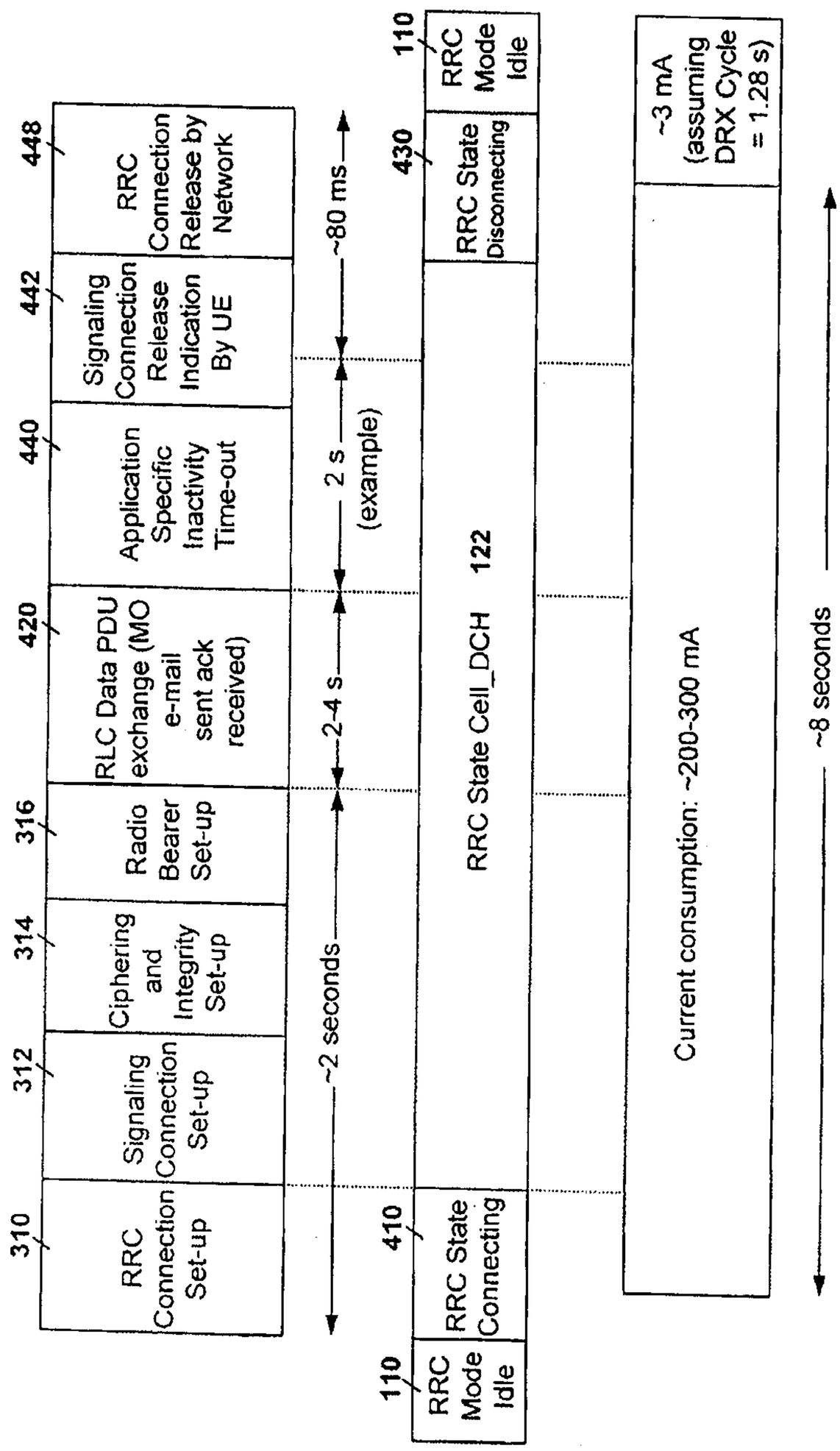
310
RRC Connection Set-up
312
Signaling Connection Set-up
314
Ciphering and Integrity Set-up
316
Radio Bearer Set-up
420
RLC Data PDU exchange (MO e-mail sent ack received)
440
Application Specific Inactivity Time-out
442
Signaling Connection Release Indication By UE
448
RRC Connection Release by Network
~2 seconds
2-4 s
2 s (example)
~80 ms
410
RRC State Connecting
110
RRC Mode Idle
RRC State Cell_DCH 122
430
RRC State Disconnecting
110
RRC Mode Idle
Current consumption: ~200-300 mA
~3 mA (assuming DRX Cycle = 1.28 s)
~8 seconds

FIG. 5B

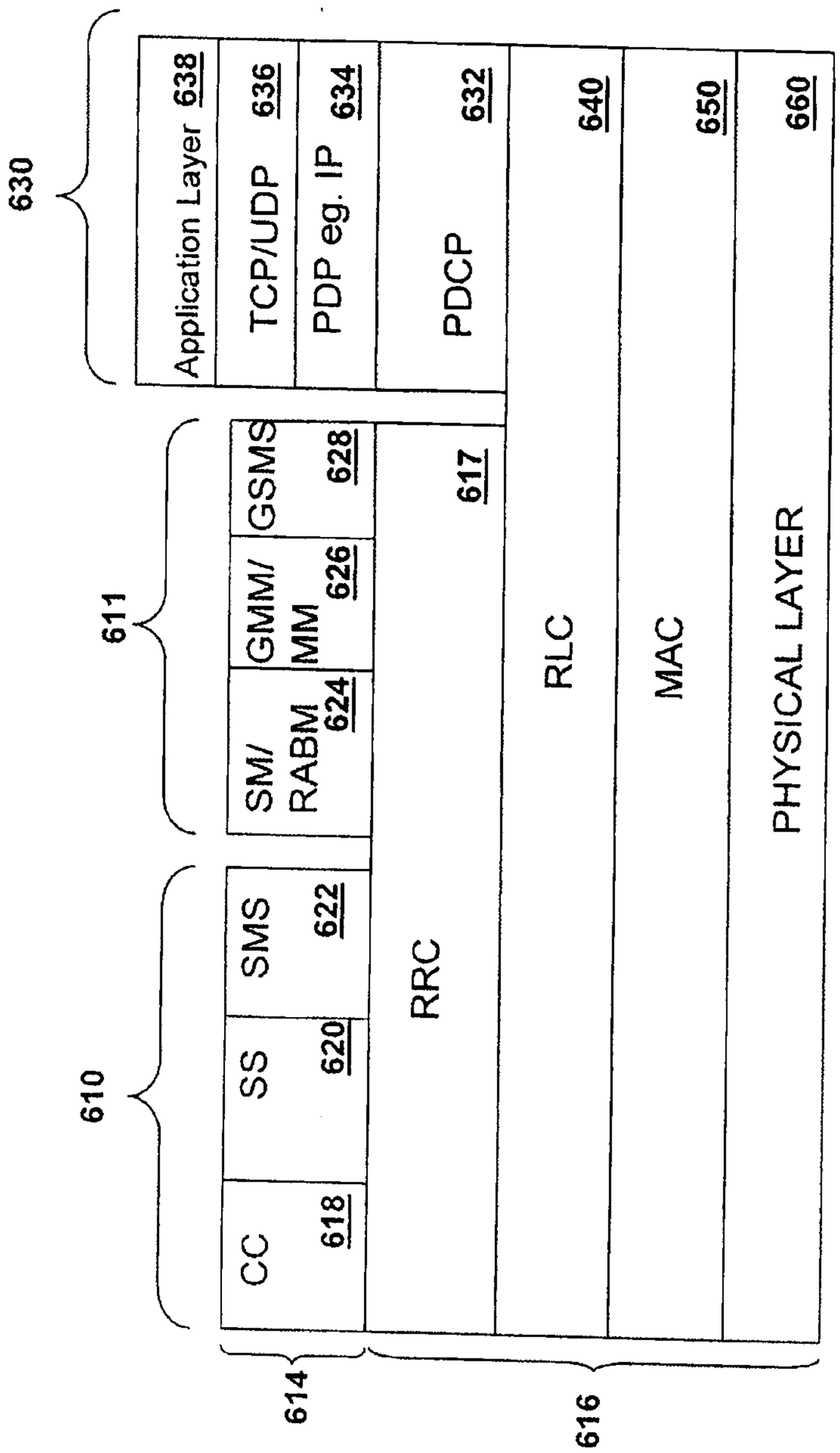
630
Application Layer 638
TCP/UDP 636
PDP eg. IP 634
PDCP 632
640
650
660
611
GSMS 628
GMM/ MM 626
SM/ RABM 624
617
610
SMS 622
SS 620
CC 618
RRC
RLC
MAC
PHYSICAL LAYER
614
616

FIG 6

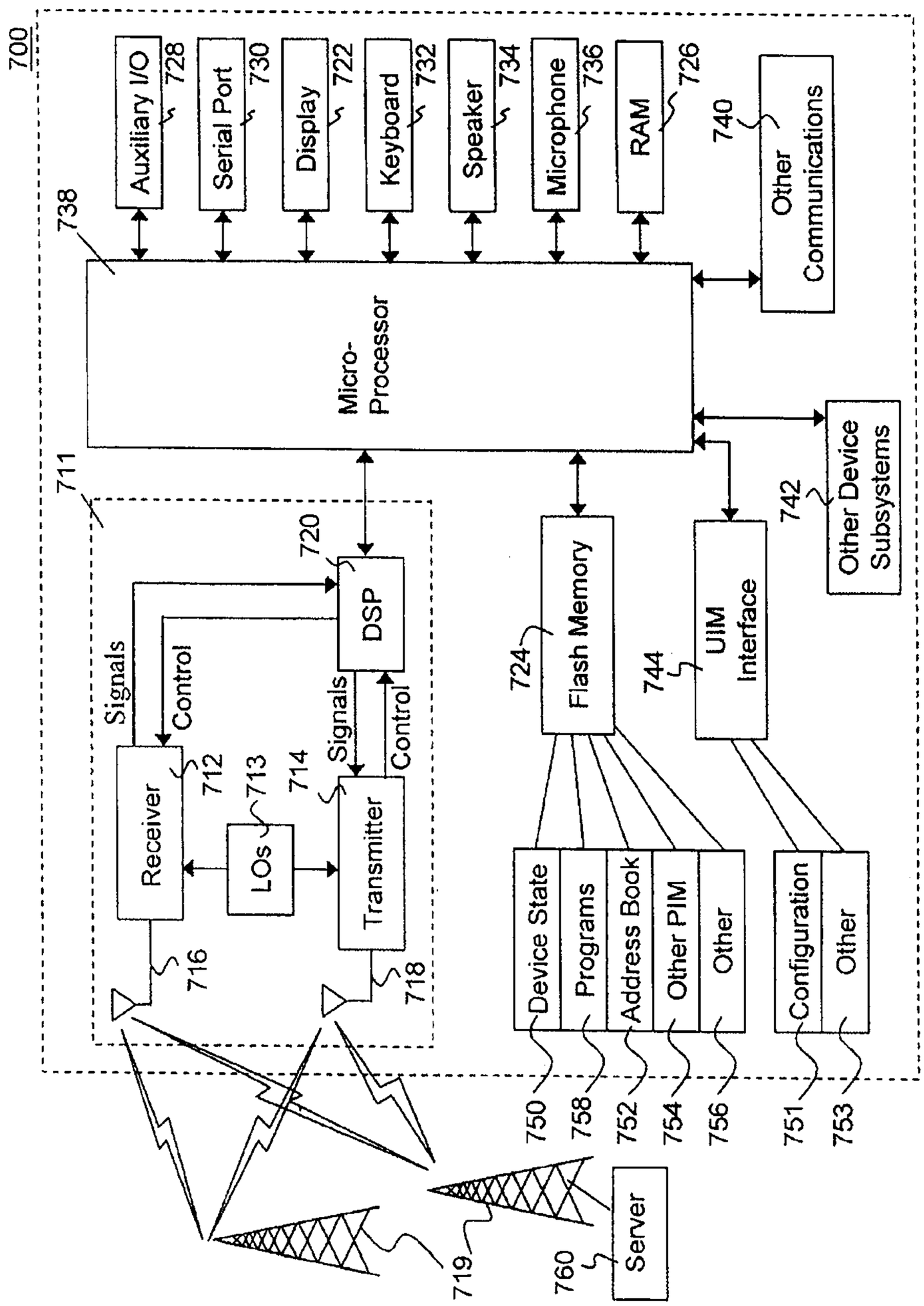
700
Auxiliary I/O
728
Serial Port
730
Display
722
Keyboard
732
Speaker
734
Microphone
736
RAM
726
740
Other Communications
738
Micro-Processor
711
720
DSP
Signals
Control
Signals
Control
Receiver
712
713
714
LOs
Transmitter
716
718
724
Flash Memory
744
UIM Interface
742
Other Device Subsystems
Device State
Programs
Address Book
Other PIM
Other
Configuration
Other
750
758
752
754
756
751
753
719
760
Server

FIG. 7

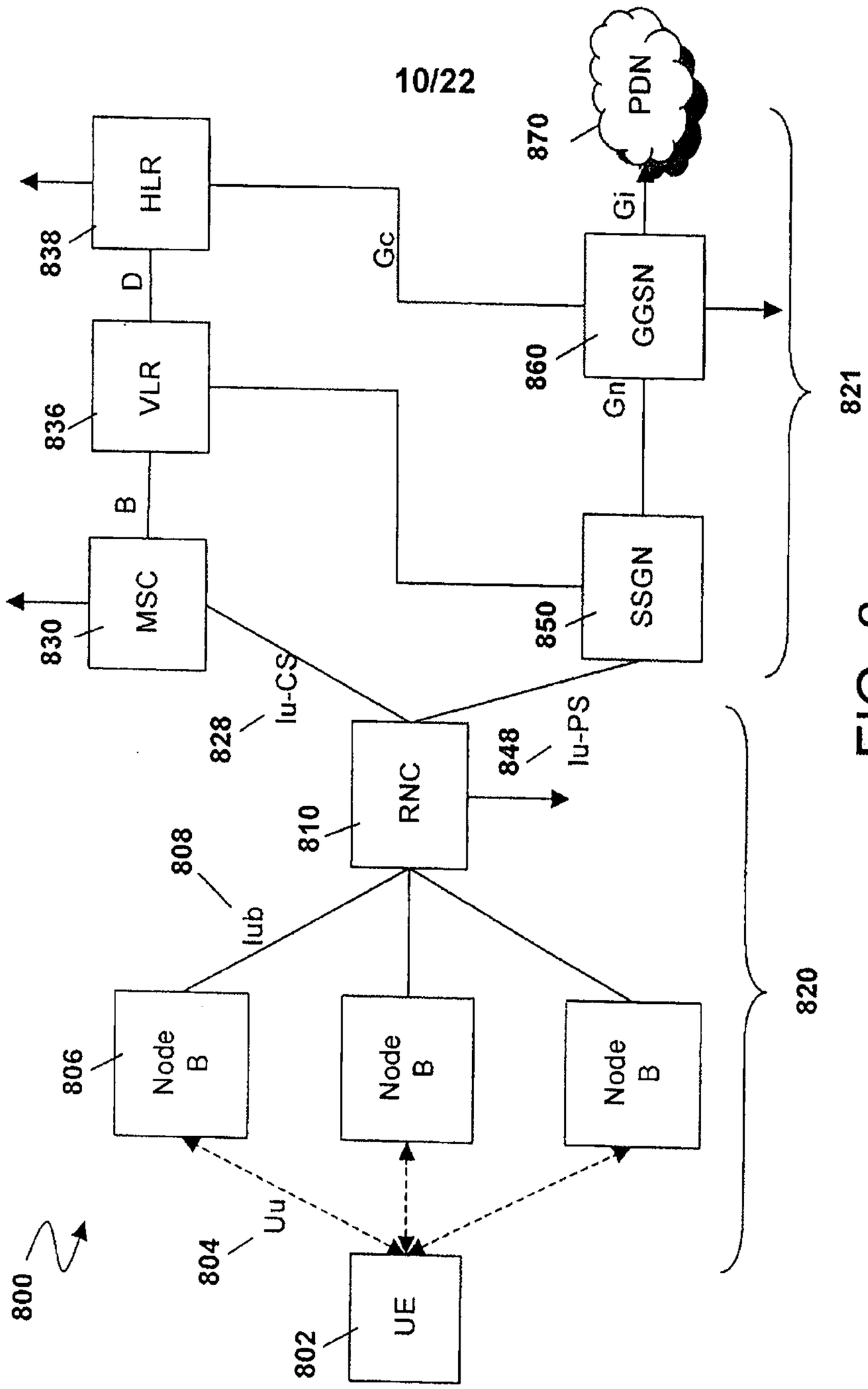
800
UE
802
Uu
804
Node B
806
Node B
Node B
Iub
808
RNC
810
Iu-CS
828
Iu-PS
848
820
MSC
830
B
VLR
836
D
HLR
838
SSGN
850
Gn
GGSN
860
Gc
Gi
PDN
870
821

FIG. 8

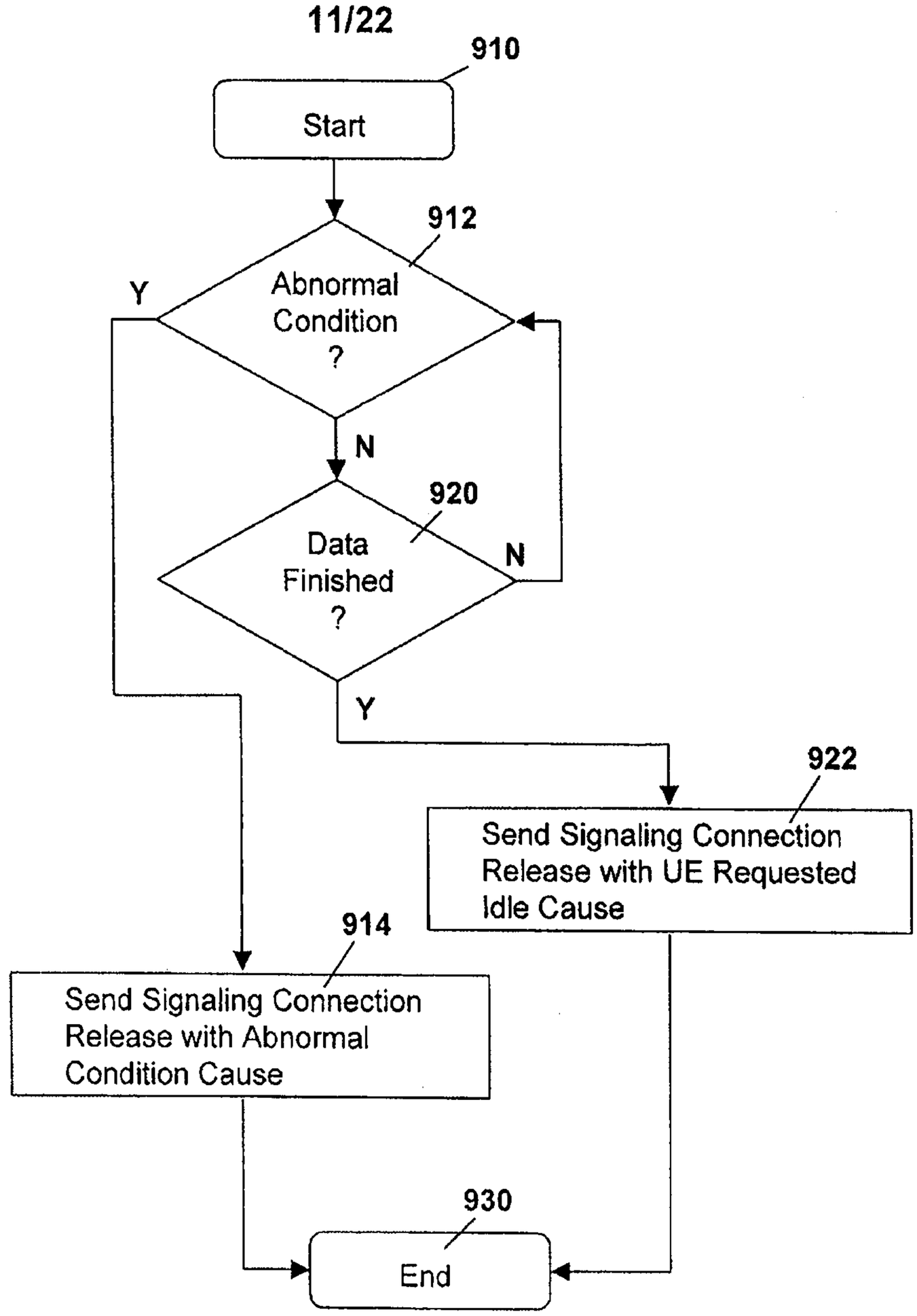
910
Start
912
Abnormal Condition ?
Y
N
920
Data Finished ?
N
Y
922
Send Signaling Connection Release with UE Requested Idle Cause
914
Send Signaling Connection Release with Abnormal Condition Cause
930
End

FIG. 9

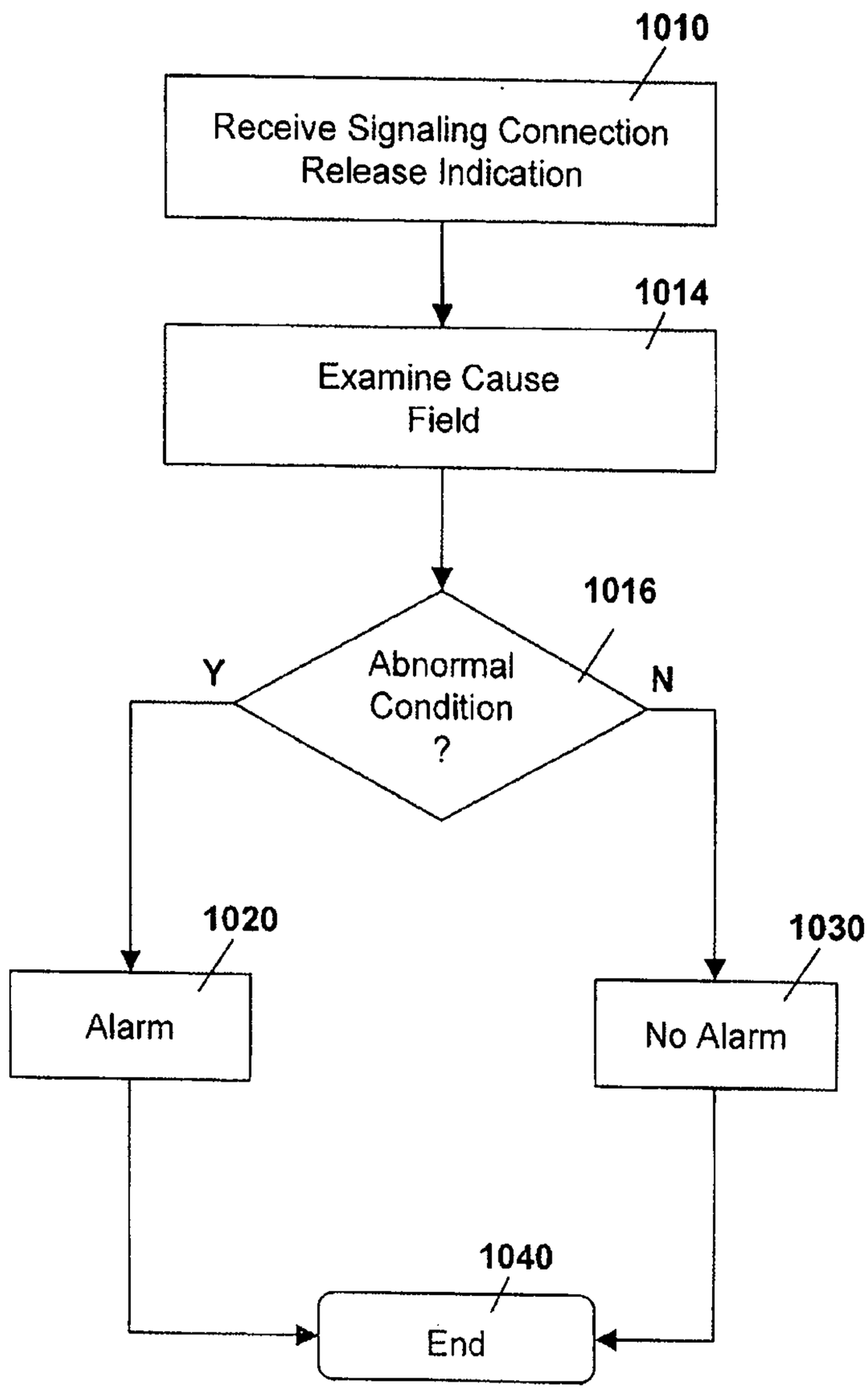
1010
Receive Signaling Connection Release Indication
1014
Examine Cause Field
1016
Abnormal Condition ?
Y
N
1020
Alarm
1030
No Alarm
1040
End

FIG. 10

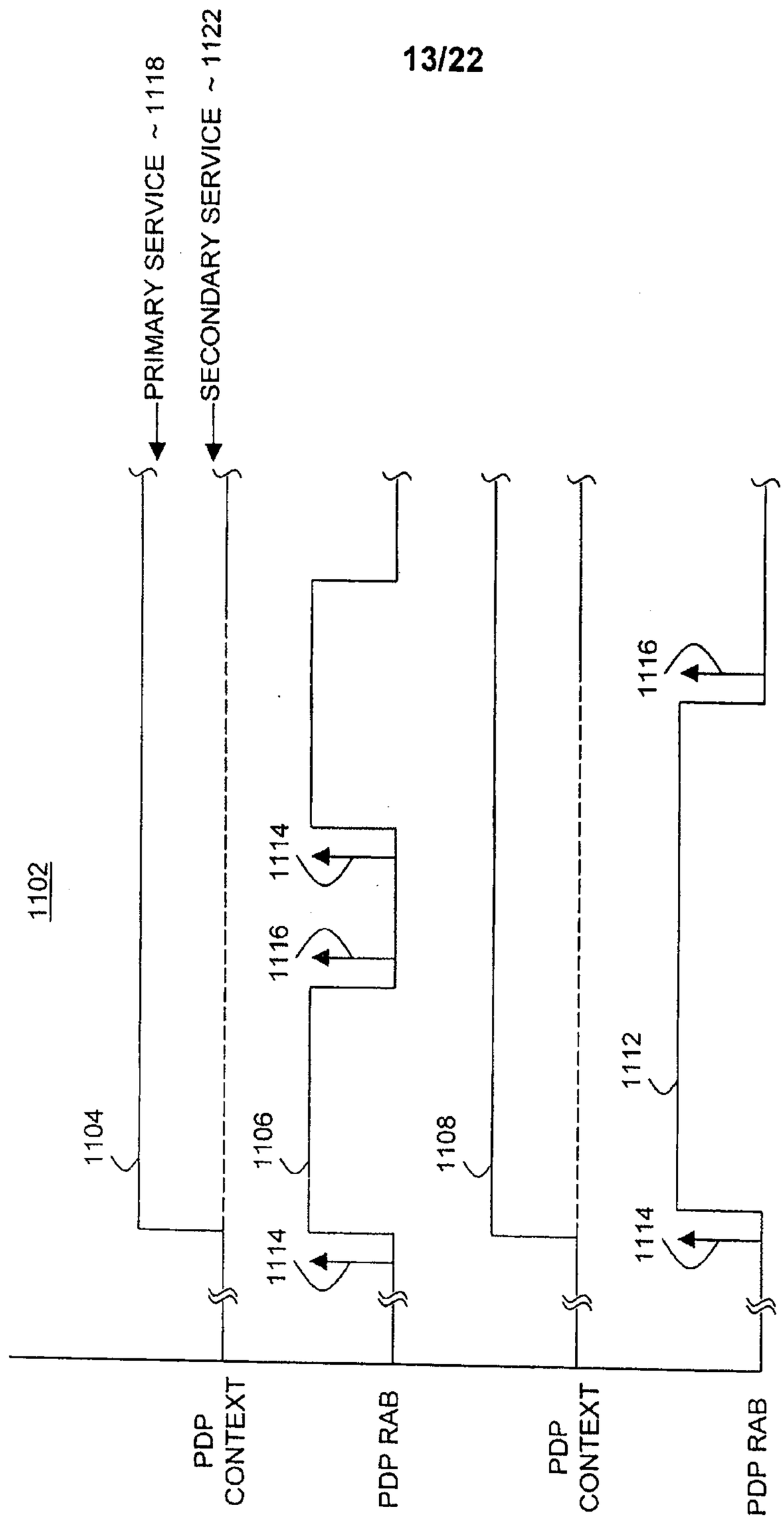
1102
PRIMARY SERVICE ~ 1118
SECONDARY SERVICE ~ 1122
1104
1106
1108
1112
1114
1116
PDP CONTEXT
PDP RAB
PDP CONTEXT
PDP RAB

FIG. 11

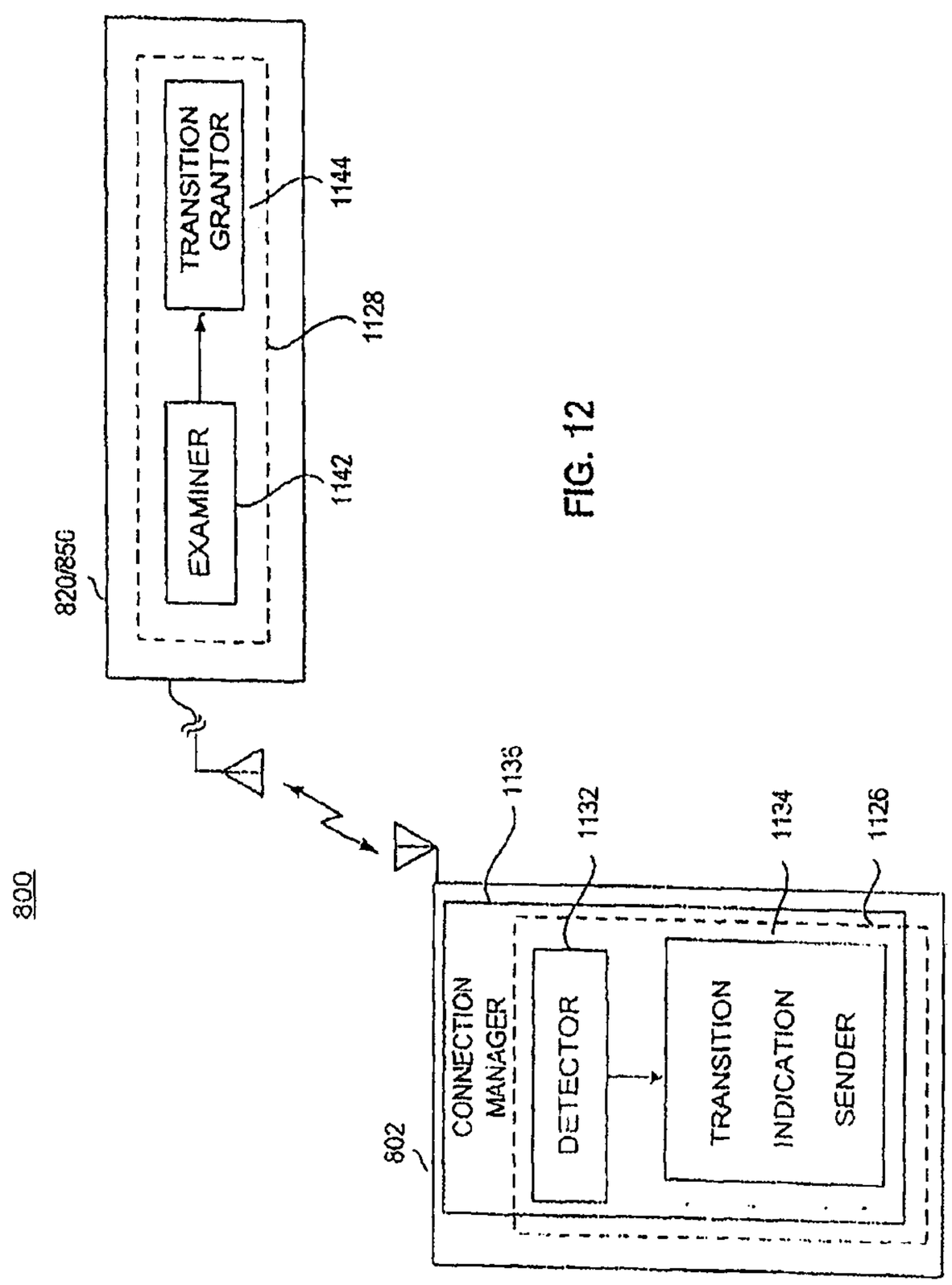
800
820/850
EXAMINER
TRANSITION GRANTOR
1142
1128
1144
802
CONNECTION MANAGER
DETECTOR
TRANSITION INDICATION SENDER
1136
1132
1134
1126

FIG. 12

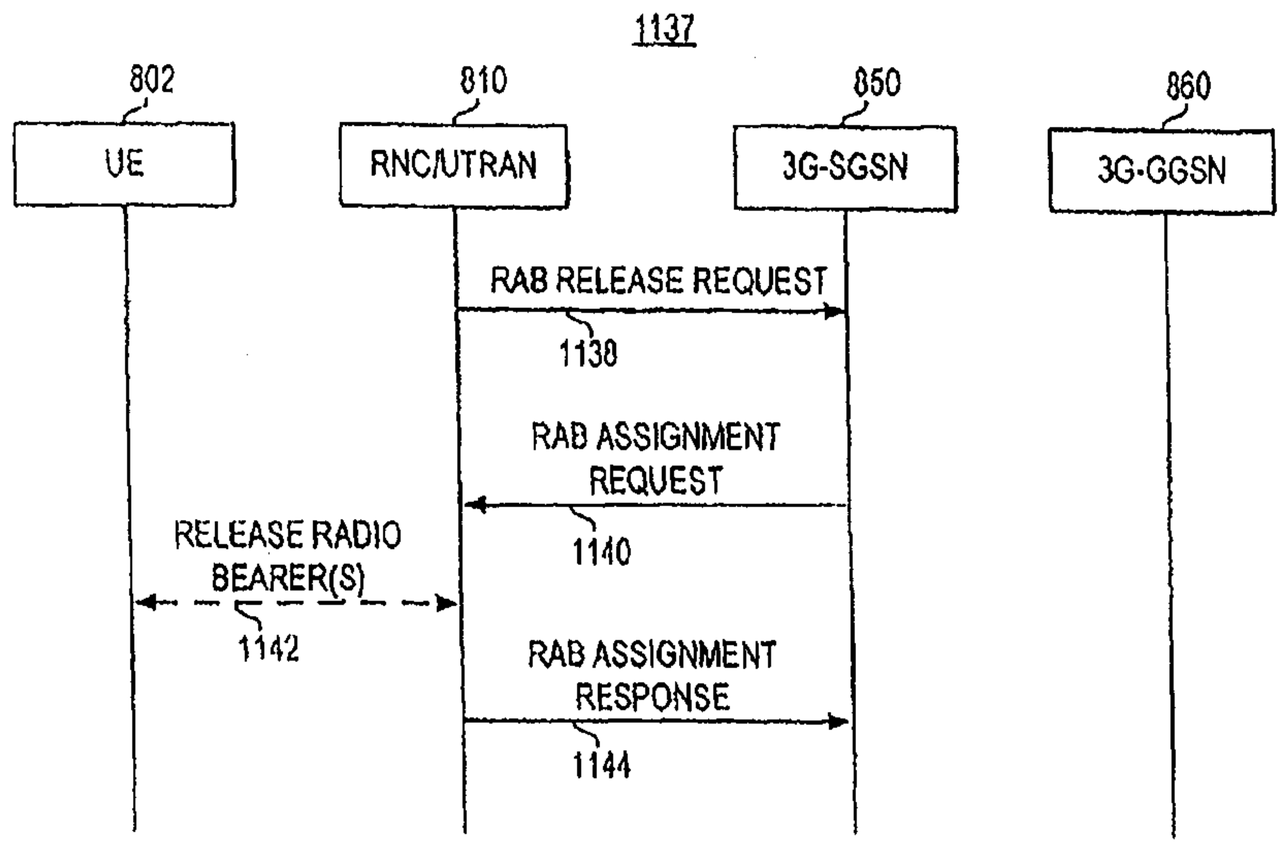
1137
802
UE
810
RNC/UTRAN
850
3G-SGSN
860
3G-GGSN
RAB RELEASE REQUEST
1138
RAB ASSIGNMENT REQUEST
1140
RELEASE RADIO BEARER(S)
1142
RAB ASSIGNMENT RESPONSE
1144

FIG. 13

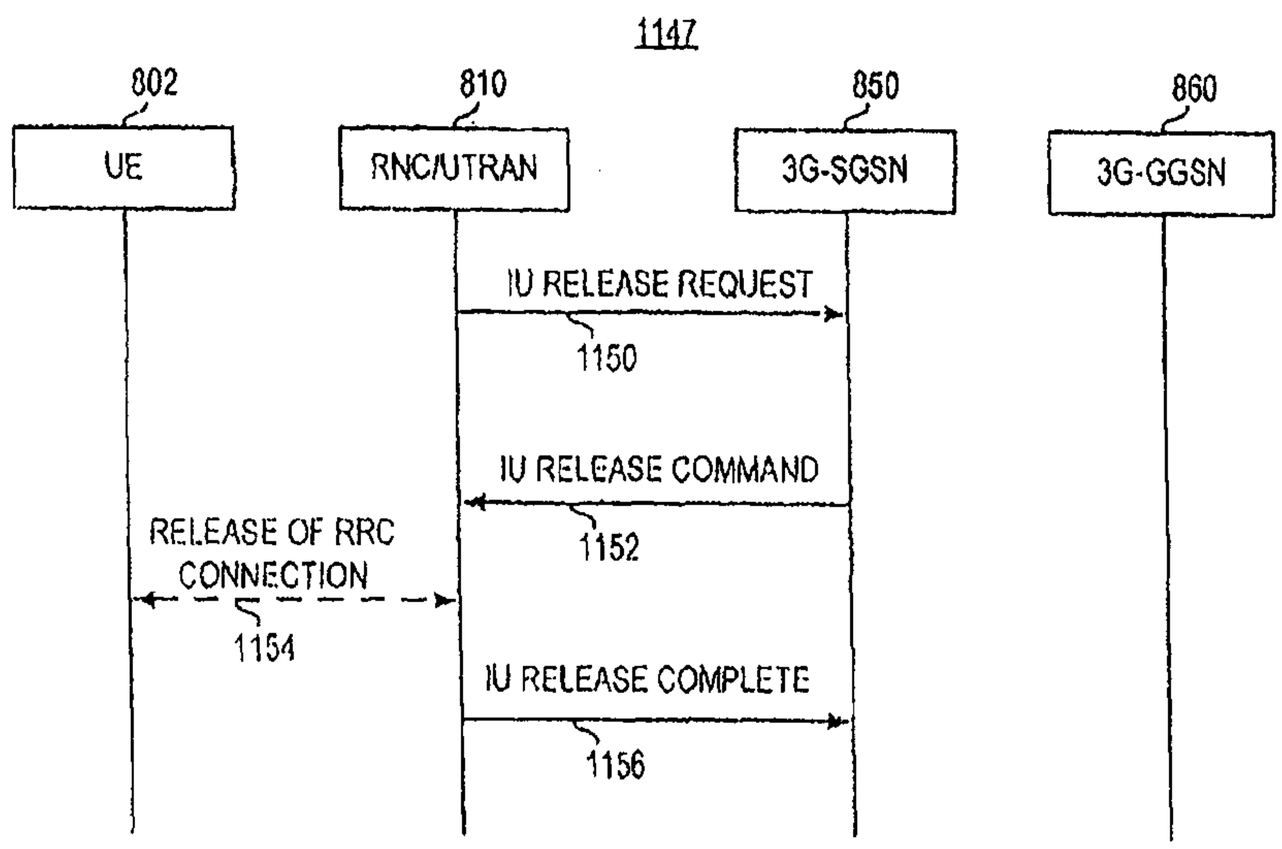
1147
802
UE
810
RNC/UTRAN
850
3G-SGSN
860
3G-GGSN
IU RELEASE REQUEST
1150
IU RELEASE COMMAND
1152
RELEASE OF RRC CONNECTION
1154
IU RELEASE COMPLETE
1156

FIG. 14

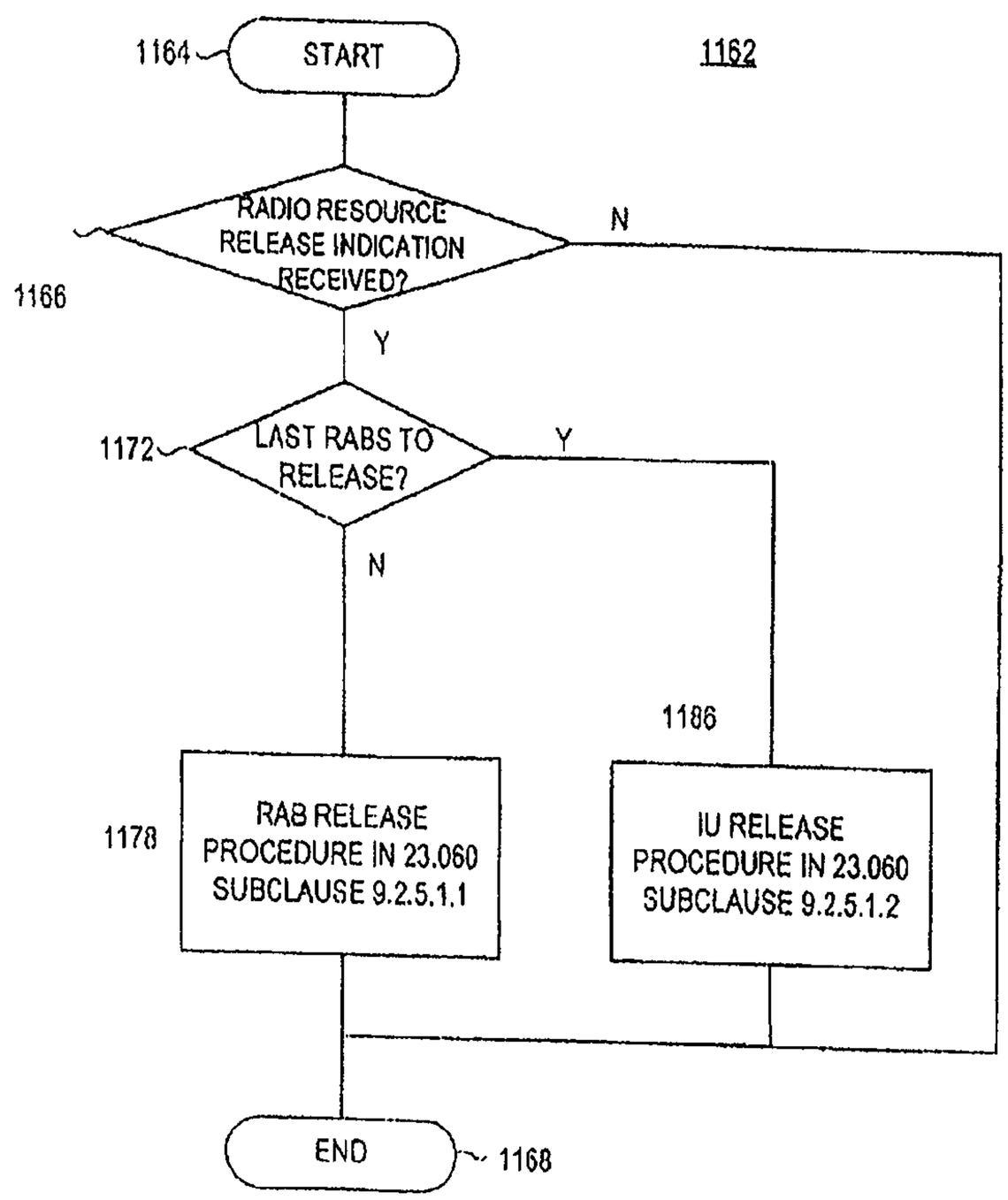
1164
START
1162
RADIO RESOURCE RELEASE INDICATION RECEIVED?
N
1166
Y
1172
LAST RABS TO RELEASE?
Y
N
1186
1178
RAB RELEASE PROCEDURE IN 23.060 SUBCLAUSE 9.2.5.1.1
IU RELEASE PROCEDURE IN 23.060 SUBCLAUSE 9.2.5.1.2
END
1168

FIG. 15

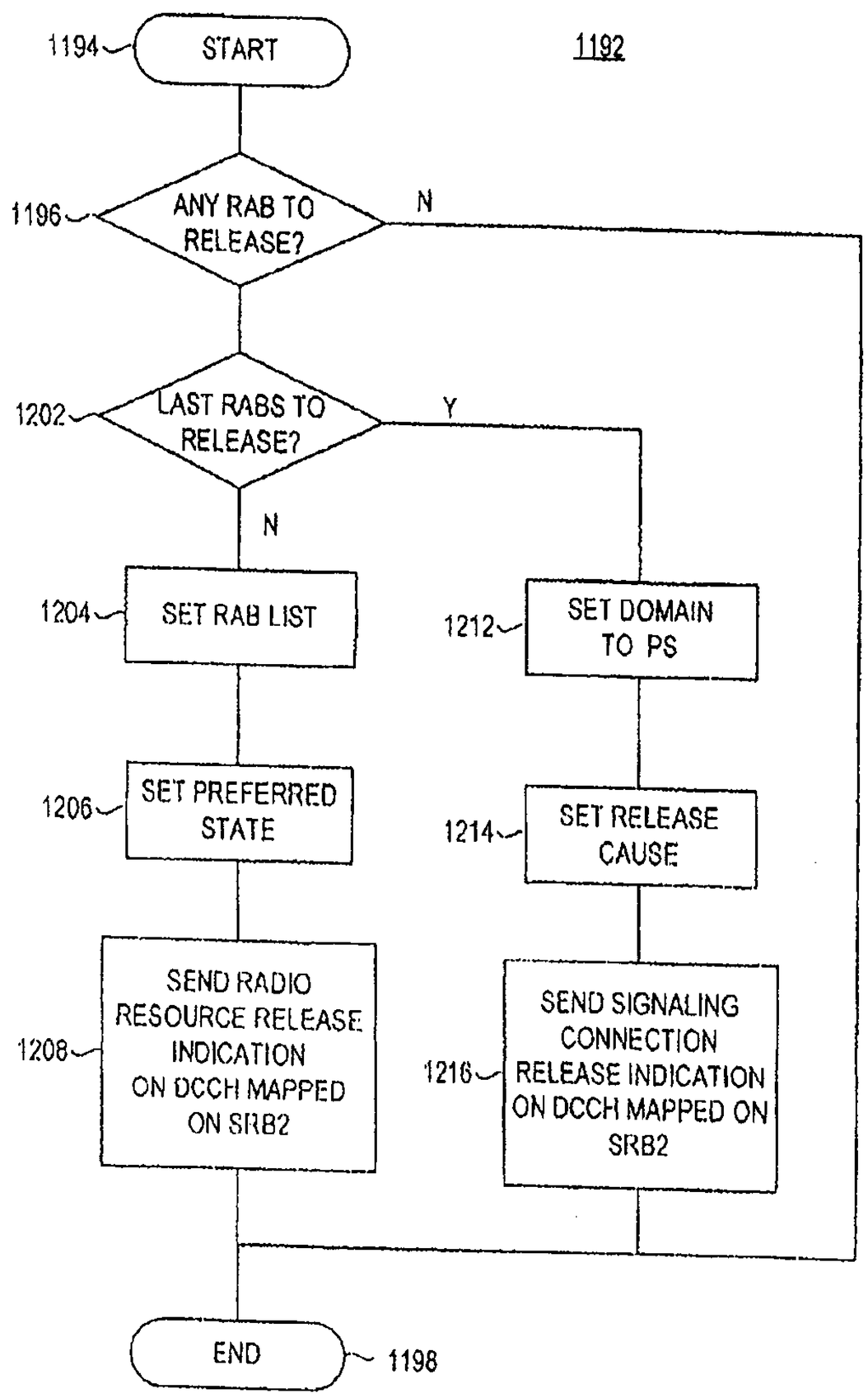
1194
START
1192
1196
ANY RAB TO RELEASE?
N
1202
LAST RABS TO RELEASE?
Y
N
1204
SET RAB LIST
1212
SET DOMAIN TO PS
1206
SET PREFERRED STATE
1214
SET RELEASE CAUSE
1208
SEND RADIO RESOURCE RELEASE INDICATION ON DCCH MAPPED ON SRB2
1216
SEND SIGNALING CONNECTION RELEASE INDICATION ON DCCH MAPPED ON SRB2
END
1198

FIG. 16

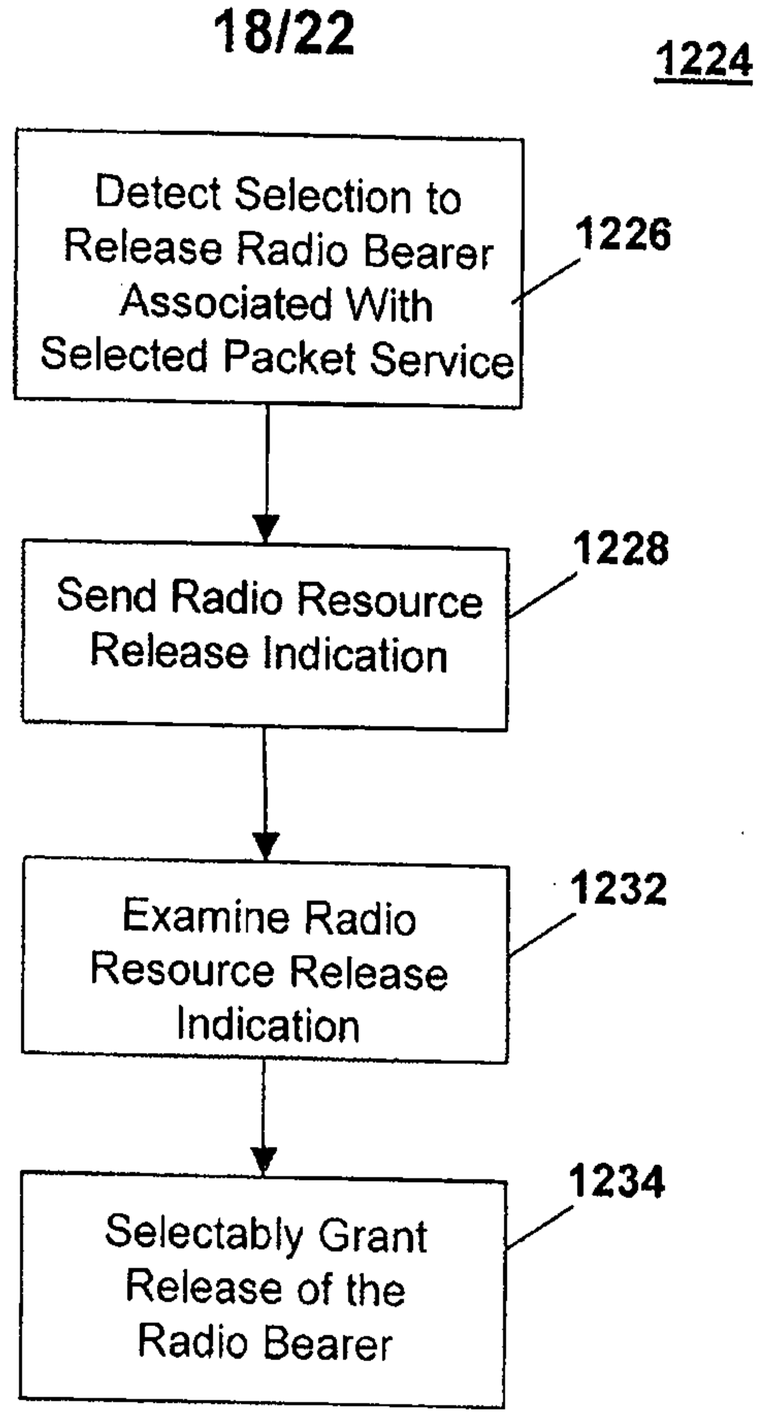
1224
Detect Selection to Release Radio Bearer Associated With Selected Packet Service
1226
Send Radio Resource Release Indication
1228
Examine Radio Resource Release Indication
1232
Selectably Grant Release of the Radio Bearer
1234

Fig. 17

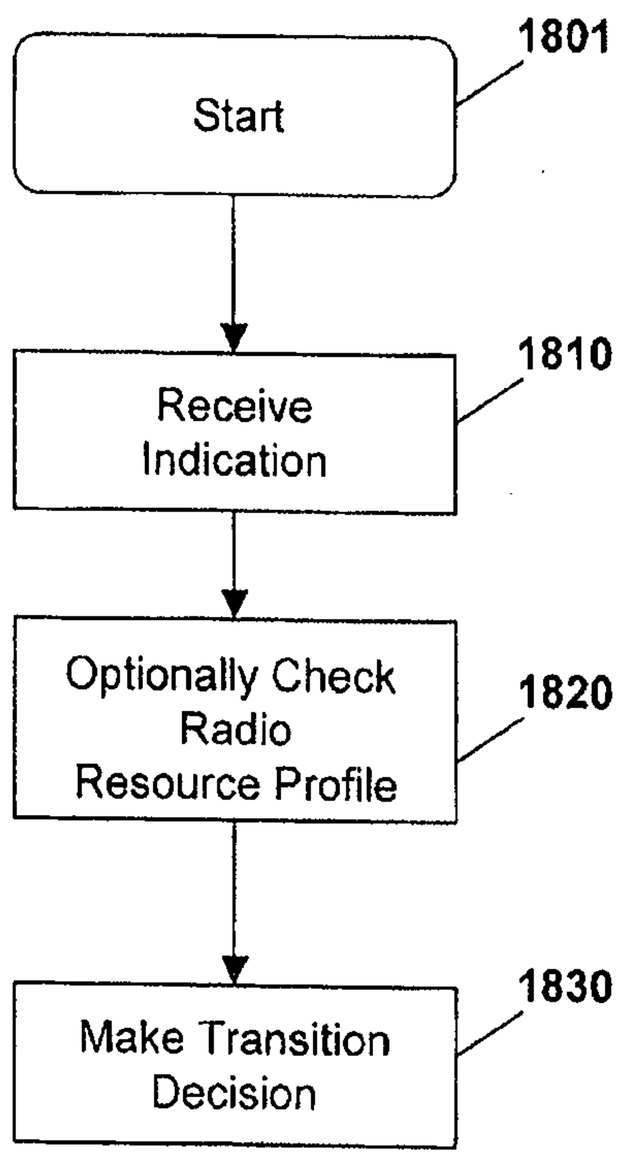
Start
1801
Receive Indication
1810
Optionally Check Radio Resource Profile
1820
Make Transition Decision
1830

Fig. 18

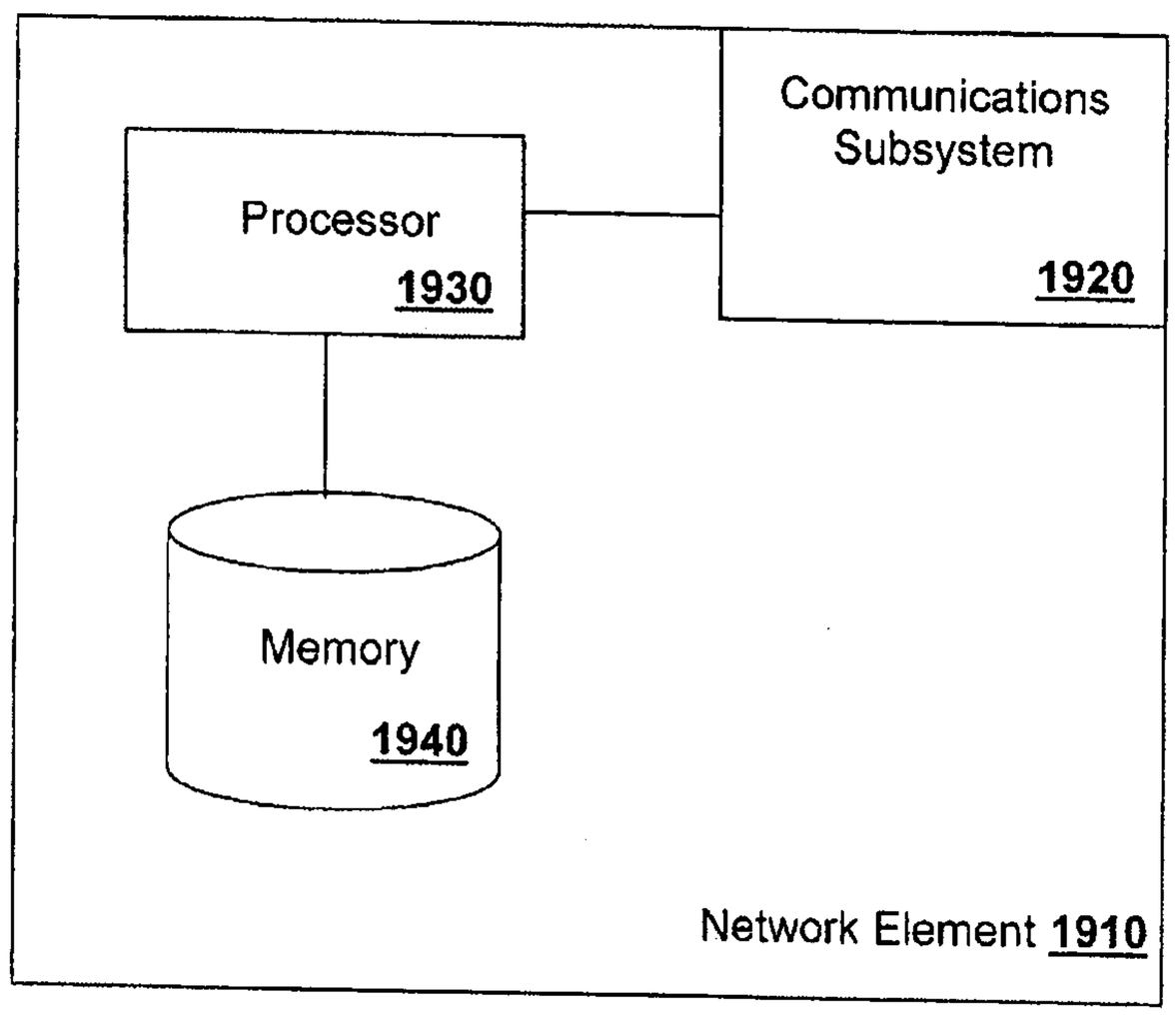
Communications Subsystem
1920
Processor
1930
Memory
1940
Network Element 1910

Fig. 19

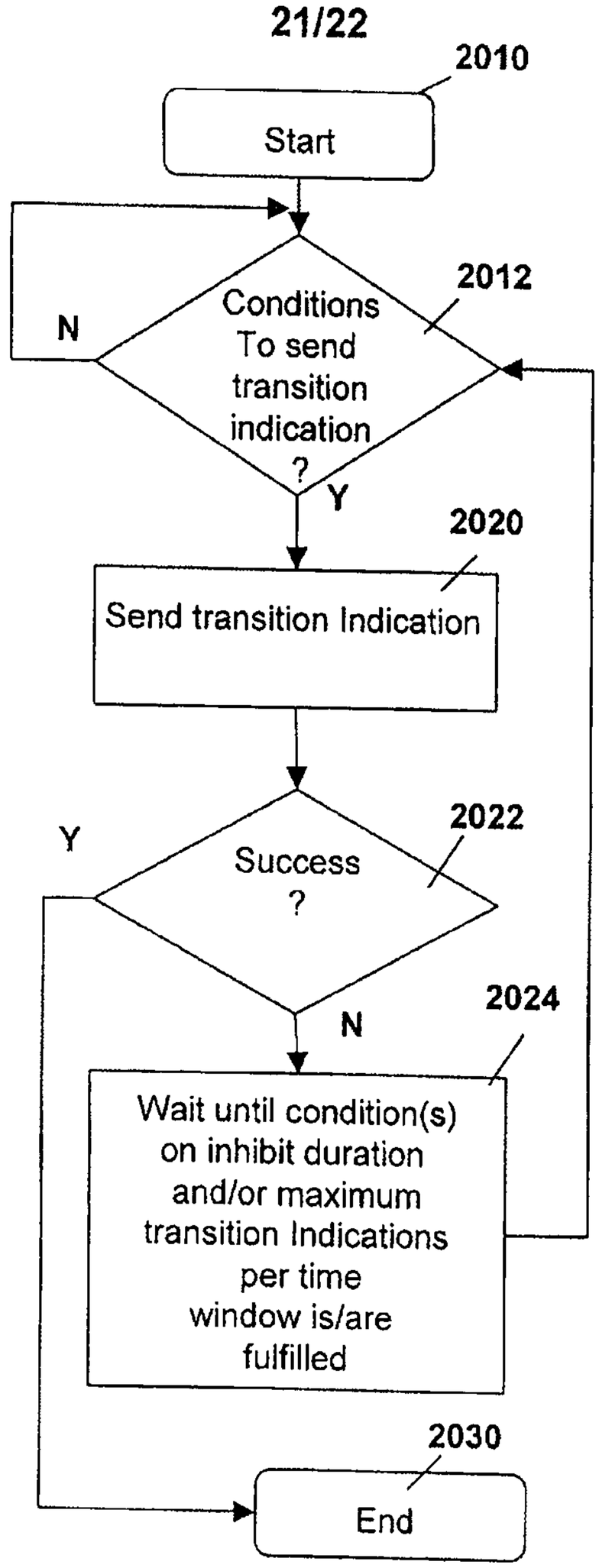
2010
Start
2012
Conditions To send transition indication ?
N
Y
2020
Send transition Indication
2022
Success ?
Y
N
2024
Wait until condition(s) on inhibit duration and/or maximum transition Indications per time window is/are fulfilled
2030
End

FIG. 20

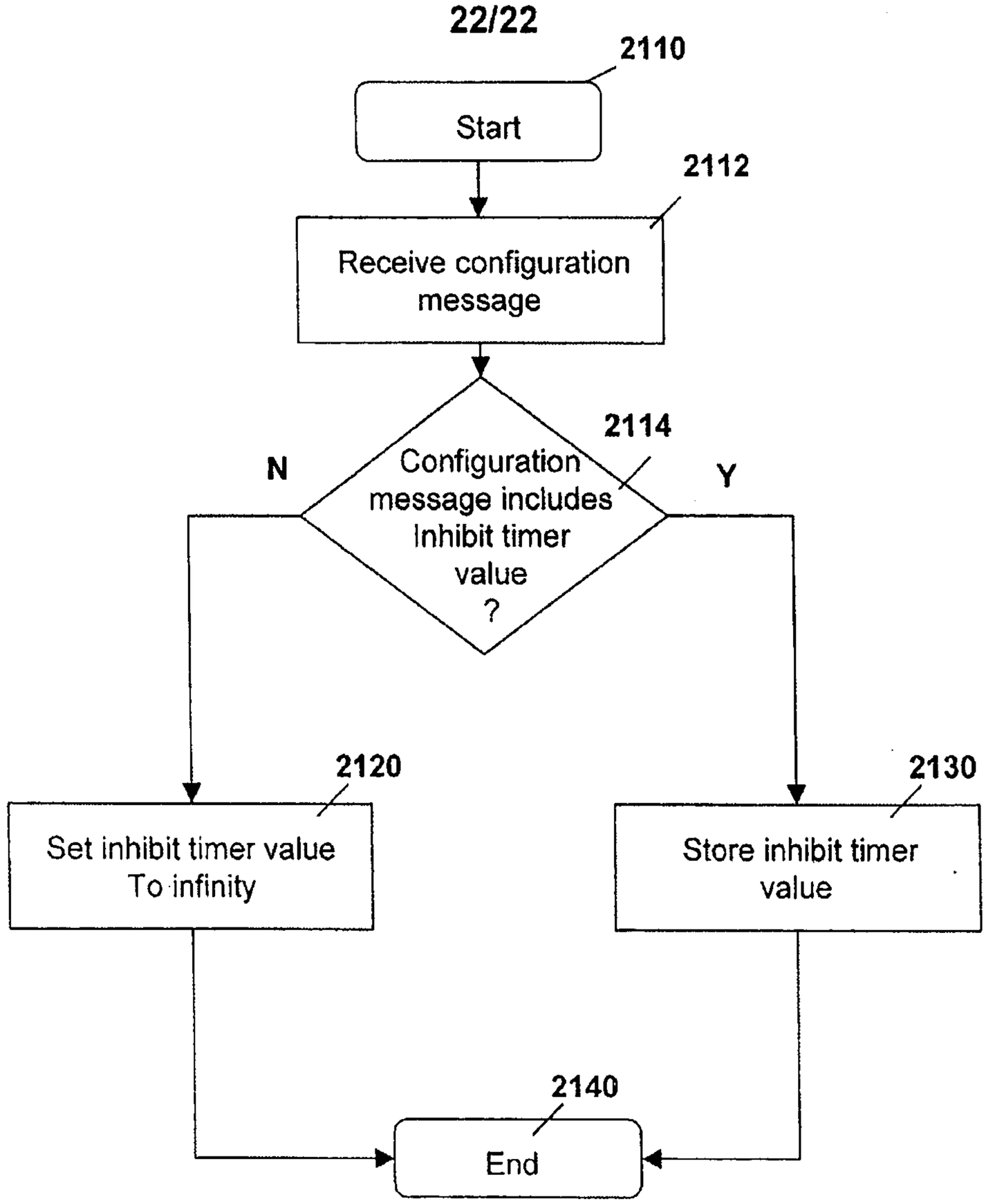
2110
Start
2112
Receive configuration message
2114
Configuration message includes Inhibit timer value ?
N
Y
2120
Set inhibit timer value To infinity
2130
Store inhibit timer value
2140
End

FIG. 21

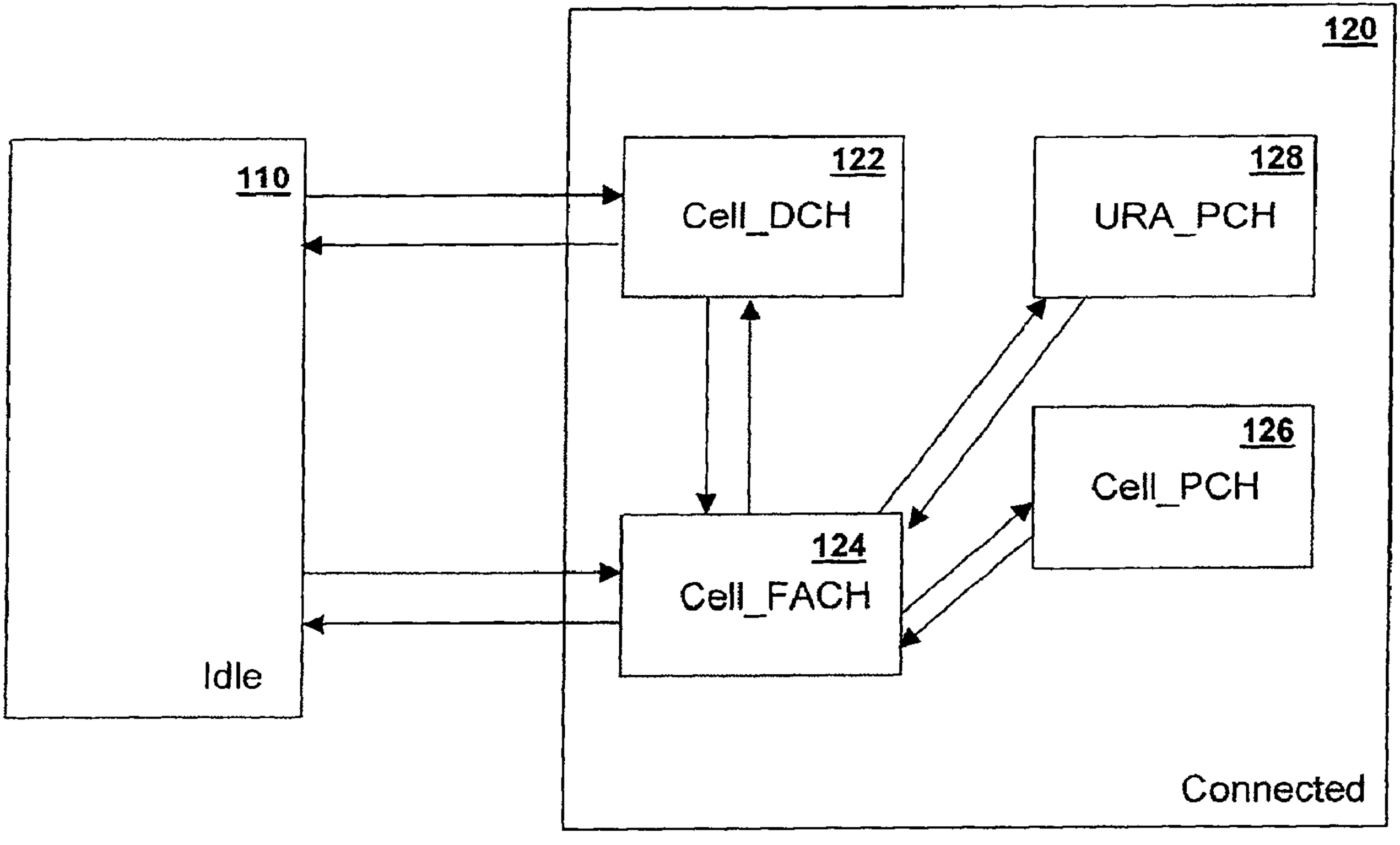
120
110
122
Cell_DCH
128
URA_PCH
126
Cell_PCH
124
Cell_FACH
Idle
Connected