(12) INTERNATIONAL APPLICATION PUBLISHED UNDER THE PATENT COOPERATION TREATY (PCT)

(19) World Intellectual Property Organization
International Bureau

(43) International Publication Date
25 June 2020 (25.06.2020)

WIPO | PCT

(10) International Publication Number
WO 2020/131922 A1

(51) International Patent Classification:
*B65D 85/72* (2006.01) *B65D 51/00* (2006.01)
*B65D 6/02* (2006.01)

(21) International Application Number:
PCT/US2019/066931

(22) International Filing Date:
17 December 2019 (17.12.2019)

(25) Filing Language: English

(26) Publication Language: English

(30) Priority Data:
62/782,899 20 December 2018 (20.12.2018) US

(71) Applicant: **SILGAN CONTAINERS LLC** [US/US]; 21600 Oxnard Street, Suite 1600, Woodland Hills, California 91367 (US).

(72) Inventor: **BAKER, Gerald James**; 2473 North 83rd Street, Wauwatosa, Wisconsin 53213 (US).

(74) Agent: **JUBBER, Brad G.** et al.; 1000 North Water Street, Suite 1700, Milwaukee, Wisconsin 53202 (US).

(81) Designated States *(unless otherwise indicated, for every kind of national protection available)*: AE, AG, AL, AM, AO, AT, AU, AZ, BA, BB, BG, BH, BN, BR, BW, BY, BZ, CA, CH, CL, CN, CO, CR, CU, CZ, DE, DJ, DK, DM, DO, DZ, EC, EE, EG, ES, FI, GB, GD, GE, GH, GM, GT, HN, HR, HU, ID, IL, IN, IR, IS, JO, JP, KE, KG, KH, KN, KP, KR, KW, KZ, LA, LC, LK, LR, LS, LU, LY, MA, MD, ME, MG, MK, MN, MW, MX, MY, MZ, NA, NG, NI, NO, NZ, OM, PA, PE, PG, PH, PL, PT, QA, RO, RS, RU, RW, SA, SC, SD, SE, SG, SK, SL, SM, ST, SV, SY, TH, TJ, TM, TN, TR, TT, TZ, UA, UG, US, UZ, VC, VN, ZA, ZM, ZW.

(84) Designated States *(unless otherwise indicated, for every kind of regional protection available)*: ARIPO (BW, GH, GM, KE, LR, LS, MW, MZ, NA, RW, SD, SL, ST, SZ, TZ, UG, ZM, ZW), Eurasian (AM, AZ, BY, KG, KZ, RU, TJ, TM), European (AL, AT, BE, BG, CH, CY, CZ, DE, DK, EE, ES, FI, FR, GB, GR, HR, HU, IE, IS, IT, LT, LU, LV, MC, MK, MT, NL, NO, PL, PT, RO, RS, SE, SI, SK, SM, TR), OAPI (BF, BJ, CF, CG, CI, CM, GA, GN, GQ, GW, KM, ML, MR, NE, SN, TD, TG).

**Published:**
— *with international search report (Art. 21(3))*
— *before the expiration of the time limit for amending the claims and to be republished in the event of receipt of amendments (Rule 48.2(h))*

(54) Title: SINGLE-SERVE METAL COFFEE CONTAINER

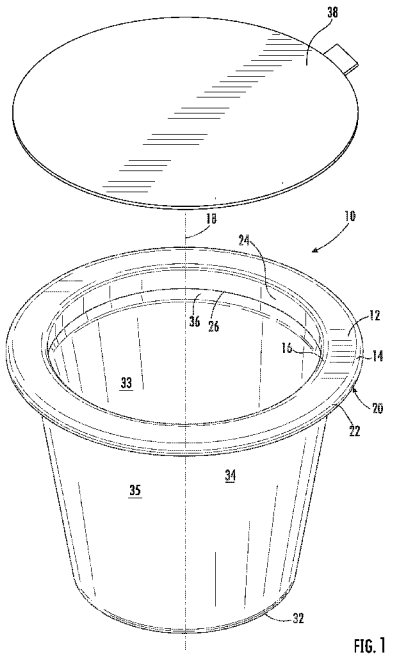


FIG. 1

(57) Abstract: A pierceable single serve liquid coffee concentrate container configured to be economically manufactured from metal and useable in existing single serve coffee makers is described. The pierceable container has a top flange coupled to a bottom with a cylindrical wall and a conical sidewall that extends inwardly from the top flange, such that a diameter of the bottom is less than a diameter of the top flange. The pierceable container may include a filter that holds a ground or pulverized organic or synthetic powdered mixture. The filter facilitates mixing and/or brewing the powdered contents, for example, in an instant mix coffee, cocoa, or tea beverage. The container may also have a cover or lid that hermetically seals the contents until the container is pierced and brewed.

WO 2020/131922 A1

# SINGLE-SERVE METAL COFFEE CONTAINER

## CROSS-REFERENCE TO RELATED PATENT APPLICATION

**[0001]** The present application claims the benefit of and priority to U.S. Provisional Application No. 62/782,899 filed on December 20, 2018, which is incorporated herein by reference in its entirety.

## BACKGROUND

**[0002]** A typical single-serve coffee container is fabricated from plastic and is designed to contain ground coffee. However, given the effect of time on the taste profile of ground coffee, it would be advantageous to replace ground coffee with a liquid coffee concentrate ("LCC") for use in a single serve coffee machine. However, plastic is not the ideal material with which to contain and store LCC. Given the permeability and thermal properties required to properly contain LCC metal would be a more desirable material from which to manufacture a single serve container for LCC. Furthermore, it is not just the use of metal which is important, it is also the selection of the metal and particular configuration changes from a typical plastic container which are important. In particular, the container must be pierceable, configured to permit high speed, economical manufacturing, configured to permit dense packing for shipping to a filling facility, and configured to work within existing single-serve coffee machines. Additionally, the density of packing must not interfere with the ability to efficiently separate the containers during the filling process. In addition to the particular metal and configuration selection, the selection of coating for the container is also important because it affects the manufacturability of the container, the handling of the container and the effect of the container on contained LCC.

## SUMMARY

**[0003]** One embodiment of the invention relates to a pierceable metal container. The container includes a circular top flange laying within a plane and extending between an outside edge and a circular inside edge centered on a longitudinal, central axis. The circular inside edge has a first diameter. An edge portion extends from the flange outwardly from the central axis and bent inwardly toward the central axis. The cross-sectional shape of the edge portion has a curved portion with a first radius. A cylindrical wall extends perpendicular to, and from, the inside edge of the top flange and being parallel to the central axis. The cylindrical wall terminates at a wall

edge having the first diameter. A bottom including a circular central wall parallel to the top flange is centered upon the central axis. The central wall includes a trough at its periphery. The trough incudes a depth and a cross sectional shape having a second radius. The trough terminates at a bottom edge having a second diameter being less than the first diameter. A conical sidewall extends from the wall edge to the bottom edge.

**[0004]** Another embodiment of the invention relates to a metal container with a top flange, an edge, a cylindrical wall, a bottom, a conical sidewall, and a cover. The top flange is centered on an central axis and extends along a plane between an outside edge and a circular inside edge and has a first diameter. The edge extends radially from the top flange and the central axis and is bent inwardly toward the central axis. A cross-sectional shape of the edge has a curved portion with a first radius. The cylindrical wall extends perpendicular to and from the inside edge of the top flange. The cylindrical wall extends parallel to the central axis and terminates at a wall edge with the first diameter. The bottom has a circular central wall parallel to the plane and centered on the central axis. The central wall includes a trough with a depth and cross-sectional shape that has a second radius at its periphery. The trough terminates at a bottom edge that has a second diameter that is less than the first diameter. The conical sidewall extends from the wall edge to the bottom edge. The cover is coupled to the circular inside edge of the top flange and forms a hermetic seal to seal contents stored within the metal container.

**[0005]** Another embodiment of the invention relates to a pierceable metal container with a circular top flange, an edge portion, a cylindrical wall, a bottom, a conical sidewall, a filter, and a cover. The circular top flange lies on a plane and extends between an outside edge and a circular inside edge centered on a central axis. The circular inside edge has a first diameter. The edge portion extends from the top flange outwardly from the central axis and bends inwardly toward the central axis. The cross-sectional shape of the edge portion has a curved portion with a first radius. The cylindrical wall extends perpendicular to, and from, the inside edge of the top flange and is parallel to the central axis. The cylindrical wall terminates at a wall edge having the first diameter. The bottom has a circular central wall parallel to the top flange and is centered on the central axis. The central wall has a trough at its periphery with a depth and a cross sectional shape defining a second radius. The trough terminates at a bottom edge with a second diameter that is less than the first diameter. The conical sidewall extends from the wall edge to the bottom

edge. The cover encircles the circular inside edge of the top flange and forms a hermetic seal that pressure seals contents stored within the metal container.

**[0006]** Alternative exemplary embodiments relate to other features and combinations of features as may be generally recited in the claims.

## BRIEF DESCRIPTION OF THE DRAWINGS

**[0007]** FIG. 1 is a perspective view of a metal coffee container;

**[0008]** FIG. 2 is a side view of the container;

**[0009]** FIG. 3 is a top view of the container;

**[0010]** FIG. 4 is a bottom view of the container;

**[0011]** FIG. 5 is a cross-sectional view taken along line 5-5 of FIG. 2;

**[0012]** FIG. 6 is a cross-sectional view taken along line 6-6 of FIG. 2;

**[0013]** FIG. 7 is a cross-sectional view taken along line 7-7 of FIG. 2; and

**[0014]** FIG. 8 is a dimensioned drawing of a side cross-sectional view of the container.

## DETAILED DESCRIPTION

**[0015]** The figures illustrate a pierceable metal container 10. The purpose of container 10 is to contain a concentrate such as ground coffee or LCC which is injected with hot or cold water to form a drink. An example of a machine which provides this function are Keurig coffee makers which make drinks such as coffee, tea and hot chocolate. Metal container 10 is configured and formed from a metal to permit use of such containers as a substitute for plastic containers for concentrates. Metal container offer advantages relating to gas permeability and concentrate interaction which have justified the costs and development efforts which have been required to overcome the numerous problems encountered in attempting to manufacture a satisfactory metal container.

**[0016]** As shown in the figures, container 10 includes a circular top flange 12 laying within a plane and extending between an outside edge 14 and a circular inside edge 16 centered on a longitudinal, central axis 18. Top flange 12 has a length L1 between 0.2 and 0.24 inches wide, specifically 0.22 ±0.01 inches. Top flange 12 has a diameter $\phi 1$ in the range of 2 and 2.5 inches, specifically 2.239 ±0.2 inches. Circular inside edge 16 has a diameter $\phi 2$ that is less than diameter $\phi 1$ and is in the range of 1.6 and 2 inches, specifically 1.8 ±0.1 inches.

**[0017]** As shown, an edge portion 20 extends from flange 12 outwardly from the central axis 18 and is bent inwardly toward the central axis 18. Edge portion 20 may extend from its periphery inwardly toward the central axis 18 a length L2 between 0.08 and 0.086 inches, but preferably extends inward 0.083 inches. For example an edge length L3 is the difference between the top flange length L1 minus the inward bend of length L2. In various embodiments, length L3 is between 0.10 and 0.15 inches, specifically 0.137 ±0.02 inches. A thickness T1 of the bent top flange 12 is between 0.05 and 0.07 inches, specifically 0.063 ±0.005 inches. The cross-sectional shape of edge portion 20 has a curved portion 22 with a radius R1 which is between 0.03 and 0.035 inches, specifically 0.0315 ±0.001 inches.

**[0018]** A cylindrical wall 24 extends perpendicular to, and from, inside edge 16 of top flange 12 and is centered on and parallel to the central axis 18. Cylindrical wall 24 terminates at a wall edge 26 and has a diameter ϕ2 substantially the same as circular inside edge 16. Height H2 of the cylindrical wall may be between 0.15 and 0.19 inches, specifically 0.17 ±0.01 inches.

**[0019]** Bottom 25 of container 10 includes a circular central wall 28 parallel to top flange 12 and centered on and perpendicular to central axis 18. Central wall 28 includes a trough 30 at its periphery, trough 30 has a depth D1 which may be between 0.045 and 0.05 inches, specifically 0.048 ±0.001 inches. Trough 30 has a cross sectional shape which may have a radius R2 between 0.022 and 0.026 inches, specifically 0.024 ±0.001 inches. Trough 30 terminates at a bottom edge 32 having a diameter ϕ3 less than diameter ϕ2 of circular inside edge 16 and less than diameter ϕ1 of top flange 12. Specifically, diameter ϕ3 of bottom edge 32 is defined by an angle α between a conical sidewall 34 and central axis 18, and a total height H1 of container 10 is between 1.5 and 2 inches, specifically between 1.6 and 1.8 inches, specifically between 1.7 and 1.75 inches, and more specifically is 1.733 ±0.1 inches. In various embodiments, sidewall 34 has a vertical component or height H3 along central axis 18 is between 1.85 and 1.65 inches, specifically between 1.69 and 1.81 inches and an angle α from central axis 18 to sidewall 34 between 5 and 7 degrees, specifically 6 degrees ±0.5 degrees. Height H3 and/or angle α facilitate stacking and unstacking empty containers 10. Sidewall 34 angle α also facilitates the insertion and removal of containers 10 from a coffee maker. Conical sidewall 34 extends from wall edge 26 to bottom edge 32. In some embodiments, container 10 also includes a transition wall 36 which extends between cylindrical wall 24 and sidewall 34.

**[0020]** Container 10 is made from a metal such as aluminum or a ferrous metal such as steel. The metal is impervious to oxygen which protects coffee grounds, tea leaves, cocoa and/or liquid coffee, tea, cocoa concentrate housed within container 10. To improve product protection and manufacturability, an inside surface 33 and an outside surface 35 of container 10 may be coated with an appropriate polymer material.

**[0021]** After container 10 is filed with an associated coffee material, a foil or plastic membrane is sealed (preferably heat sealed with a temperature activated adhesive) to top flange 12.

**[0022]** Thickness T2 of bottom 25 (e.g., from inner surface 33 to outer surface 35 of central wall 28) is in a range which allows bottom 25 to be manufactured with a drawing and/or stamping process, but also selected to permit piercing of bottom 25 without damaging the piercing device, e.g., in an associated coffee maker. Additionally, some coffee makers may pierce a side or sidewall 34 of container 10. Accordingly, a thickness T3 of container 10 side sidewall 34 may also have a thickness T3 (e.g., between inner surface 33 and outer surface 35 of sidewall 34) which allows piercing without damage to the associated coffee maker. For an aluminum container 10, thickness T2 of bottom 25 and/or thickness T3 of sidewall 34 is in the range of 0.005-0.008" to enhance piercing, specifically between 0.007"±0.0005". For a steel container, thickness T2 of bottom 25 and/or thickness T3 of sidewall 34 is in the range of 0.004-0.005" to enhance piercing, specifically between 0.0045" ±0.00025". Additionally, depending upon the metal used interior and exterior surfaces 33 and 35 of container 10 may be coated with a polymer coating. For example, where container 10 is a ferrous metal such a steel, the coating may be Sherwin Williams 9840901VR or Akzo Nobel 657E704 .

**[0023]** FIGS. 1-4 show container 10 with an optional cover 38 to hermetically seal contents 42 of container 10. Contents 42 may be liquid, solid, powder, edible, organic, inorganic, and/or synthetic. Cover 38 has a diameter $\phi 4$ that is between outer edge 14 diameter $\phi 1$ and inner edge 16 diameter $\phi 2$. Specifically, diameter $\phi 4$ is equal to or less than diameter $\phi 1$ and is equal to or greater than diameter $\phi 2$. For example, cover 38 couples to circular inside edge 16 of top flange 12. In some embodiments, cover 38 forms a pressured or vacuum seal and is impervious to ambient air, water, or other fluids. For example, a positive pressure differential or a negative pressure differential (vacuum) can be applied to the contents 42 of container 10 to improve puncturability of container 10 and/or preserve the organic, edible, and/or consumable powder contents 42. Specifically, cover 38 couples to container 10 to form a hermetic seal that isolates

the contents 42 of container 10 from microbes, viruses, debris, water, and/or air in the surrounding environment.

**[0024]** FIG. 5 further illustrates cover 38 and a filter 40. Cover 38 couples to inside edge 16 and extends into an interior formed within inner surfaces 33 of sidewall 34 and bottom 25. Cover 38 couples to top flange 12 on or between inside edge 16 and/or outside edge 14. For example, cover 38 couples to top flange 12 and extends from outside edge 14 to inside edge 16 and within the interior of container 10 (between cylindrical wall 24 and sidewall 34) to house or store powdered contents 42 or ground powder contents 42 particulates that brew and/or mix with injected hot water or milk to form a single serve beverage. In various embodiments, interior or inner surface 33 and/or exterior outer surface 35 of cover 38, sidewall 34, and/or bottom 25 are coated with PET laminate, BPA Non Intent Liquid Coating, and/or other preservative that preserves the organic, edible, and/or consumable nature of the powder contents 42 product.

**[0025]** FIG. 6 is a cross sectional view of a top half of container 10 taken along line 6—6 of FIG. 2. Similarly, FIG. 7 is a cross-section view of a bottom half of container 10 taken along line 7—7 of FIG. 2. These views show interior surface 33 and exterior surface 35 of sidewall 34 and inner surface 33 of bottom 25.

**[0026]** FIG. 8 shows dimensions for one embodiment of container 10. The figures are illustrated such that the dimensions and angles shown therein are drawn proportional to each other. As described above, flange 12 has a diameter $\phi 1$ in the range of 2 and 2.5 inches, circular inside edge 16 has a diameter $\phi 2$ that is less than diameter $\phi 1$, and bottom edge 32 has diameter $\phi 3$ that is less than diameter $\phi 2$ and $\phi 1$. Cover 38 diameter $\phi 4$ is equal to or less than diameter $\phi 1$ and is equal to or greater than diameter $\phi 2$.

**[0027]** A total height H1 of container 10 is between 1.5 and 2 inches. A height H2 of cylindrical wall 24 is between 0.15 and 0.19 inches, such that the height H3 of sidewall 34 along central axis 18 is between 1.85 and 1.65 inches, specifically between 1.69 and 1.81 inches. A length L1 of top flange 12 includes the inward bend length L2 and edge length L3. In other words, L1 represents the width or length of top flange 12 including the bend length L2 and edge length L3 of container 10. Similarly, the bend radius R1 creates a thickness T1 for flange 12.

**[0028]** Thickness T2 of bottom 25 and T3 of sidewall 34 are also selected to improve manufacturability and fabrication of container 10, e.g., through a stamping process, as well as to improve the reliable puncturability of the container 10 by a needle on a brewing machine. Depth

D1 of trough 30 on bottom edge 32 increases stackability and stability of container 10. For example, depth D1 improves the stability of metal container 10 on a level surface. Bend radii R1 and R2 of flange 12 and trough 30 are selected to enhance stability, manufacturability, and/or functionality when container 10 is used with a brewing machine. In use, an instant brewing machine includes a needle that is injected into cover 38 that encircles flange 12 of container 10. The brewing machine instantly brews the powdered contents 42 of metallic container 10 with a water, milk, or other fluid, for example, to create a single serve, coffee, tea, and/or cocoa beverage.

**[0029]** It should be understood that the figures illustrate the exemplary embodiments in detail, and it should be understood that the present application is not limited to the details or methodology set forth in the description or illustrated in the figures. It should also be understood that the terminology is for the purpose of description only and should not be regarded as limiting.

**[0030]** Further modifications and alternative embodiments of various aspects of the invention will be apparent to those skilled in the art in view of this description. Accordingly, this description is to be construed as illustrative only. The construction and arrangements, shown in the various exemplary embodiments, are illustrative only. Although only a few embodiments have been described in detail in this disclosure, many modifications are possible (e.g., variations in sizes, dimensions, structures, shapes and proportions of the various elements, values of parameters, mounting arrangements, use of materials, colors, orientations, etc.) without materially departing from the novel teachings and advantages of the subject matter described herein. Some elements shown as integrally formed may be constructed of multiple parts or elements, the position of elements may be reversed or otherwise varied, and the nature or number of discrete elements or positions may be altered or varied. The order or sequence of any process, logical algorithm, or method steps may be varied or re-sequenced according to alternative embodiments. Other substitutions, modifications, changes and omissions may also be made in the design, operating conditions and arrangement of the various exemplary embodiments without departing from the scope of the present invention.

**[0031]** For purposes of this disclosure, the term "coupled" means the joining of two components directly or indirectly to one another. Such joining may be stationary in nature or movable in nature. Such joining may be achieved with the two members and any additional intermediate members being integrally formed as a single unitary body with one another or with the two

members or the two members and any additional member being attached to one another. Such joining may be permanent in nature or alternatively may be removable or releasable in nature.

**[0032]** While the current application recites particular combinations of features in the claims appended hereto, various embodiments of the invention relate to any combination of any of the features described herein whether or not such combination is currently claimed, and any such combination of features may be claimed in this or future applications. Any of the features, elements, or components of any of the exemplary embodiments discussed above may be used alone or in combination with any of the features, elements, or components of any of the other embodiments discussed above.

**[0033]** In various exemplary embodiments, the relative dimensions, including angles, lengths and radii, as shown in the Figures are to scale. Actual measurements of the Figures will disclose relative dimensions, angles and proportions of the various exemplary embodiments. Various exemplary embodiments extend to various ranges around the absolute and relative dimensions, angles and proportions that may be determined from the Figures. Various exemplary embodiments include any combination of one or more relative dimensions or angles that may be determined from the Figures. Further, actual dimensions not expressly set out in this description can be determined by using the ratios of dimensions measured in the Figures in combination with the express dimensions set out in this description.

**[0034]** According to exemplary embodiments, the containers, and specifically the container sidewalls, discussed herein are formed from metal, and specifically may be formed from, stainless steel, tin-coated steel, aluminum, etc. In some embodiments, the containers discussed herein are formed from aluminum and the can ends are formed from tin-coated steel. In some embodiments, the sidewall of the container is formed from a metal material and other metals or materials (e.g., polymers, high-temperature plastic, thermoplastics, cardboard, ceramic, etc.) are used to form the end walls of the container.

**[0035]** Containers discussed herein may include containers of any style, shape, size, etc. For example, the containers discussed herein may be shaped such that cross-sections taken perpendicular to the longitudinal axis of the container are generally circular. However, in other embodiments the sidewall of the containers discussed herein may be shaped in a variety of ways (e.g., having other non-polygonal cross-sections, as a rectangular prism, a polygonal prism, any number of irregular shapes, etc.) as may be desirable for different applications or aesthetic

reasons. In various embodiments, the sidewall of container ϕ0 may include one or more axially extending sidewall sections that are curved radially inwardly or outwardly such that the diameter of the can is different at different places along the axial length of the can, and such curved sections may be smooth continuous curved sections. In one embodiment, container 10 may be hourglass shaped. Container 10 may be of various sizes as desired for a particular application.

**[0036]** Further, a container may include a container end (e.g., a closure, lid, cap, cover, top, end, can end, sanitary end, "pop-top", "pull top", convenience end, convenience lid, pull-off end, easy open end, "EZO" end, etc.). The container end may be any element that allows the container to be sealed such that the container is capable of maintaining a hermetic seal. In an exemplary embodiment, the upper can end may be an "EZO" convenience end, sold under the trademark "Quick Top" by Silgan Containers Corp.

**[0037]** In various embodiments, the upper can end may be a closure or lid attached to the body sidewall mechanically (e.g., snap on/off closures, twist on/off closures, tamper-proof closures, snap on/twist off closures, etc.). In another embodiment, the upper can end may be coupled to the container body via the pressure differential. The container end may be made of metals, such as steel or aluminum, metal foil, plastics, composites, or combinations of these materials. In various embodiments, the can ends, double seams, and sidewall of the container are adapted to maintain a hermetic seal after the container is filled and sealed.

**[0038]** The containers discussed herein may be used to hold perishable materials (e.g., food, drink, pet food, milk-based products, etc.). It should be understood that the phrase "food" used to describe various embodiments of this disclosure may refer to dry food, moist food, powder, liquid, or any other drinkable or edible material, regardless of nutritional value. In other embodiments, the containers discussed herein may be used to hold non-perishable materials or non-food materials. In various embodiments, the containers discussed herein may contain a product that is packed in liquid that is drained from the product prior to use. For example, the containers discussed herein may contain vegetables, pasta or meats packed in a liquid such as water, brine, or oil.

**[0039]** According to various exemplary embodiments, the inner surfaces of the upper and lower can ends and the sidewall may include a liner (e.g., an insert, coating, lining, a protective coating, sealant, etc.). The protective coating acts to protect the material of the container from degradation that may be caused by the contents of the container. In an exemplary embodiment,

the protective coating may be a coating that may be applied via spraying or any other suitable method. Different coatings may be provided for different food applications. For example, the liner or coating may be selected to protect the material of the container from acidic contents, such as carbonated beverages, tomatoes, tomato pastes/sauces, etc. The coating material may be a vinyl, polyester, epoxy, EVOH and/or other suitable lining material or spray. The interior surfaces of the container ends may also be coated with a protective coating as described above.

WHAT IS CLAIMED IS:

1. A pierceable metal container comprising:

a circular top flange laying within a plane and extending between an outside edge and a circular inside edge centered on a longitudinal, central axis, the circular inside edge having a first diameter;

an edge portion extending from the top flange outwardly from the central axis and bent inwardly toward the central axis, wherein a cross-sectional shape of the edge portion has a curved portion having a first radius;

a cylindrical wall extending perpendicular to, and from, the inside edge of the top flange and being parallel to the central axis, the cylindrical wall terminating at a wall edge having the first diameter;

a bottom including a circular central wall parallel to the top flange and centered upon the central axis and terminating at a bottom edge that has a second diameter that is less than the first diameter; and

a conical sidewall extending from the wall edge to the bottom edge.

2. The container of claim 1 wherein the first diameter is between 1.7 and 2 inches.

3. The container of claim 1, wherein a width of the top flange is between 0.2 and 0.24 inches.

4. The container of claim 1, wherein the first radius is between 0.03 and 0.035 inches.

5. The container of claim 1, wherein the cylindrical wall extends between 0.15 and 0.19 inches between the inside edge of the top flange and the wall edge.

6. The container of claim 1, wherein the edge portion is bent inwardly between 0.08 and 0.086 inches from the top flange toward the central axis.

7. The container of claim 1, wherein the radius is between 0.022 and 0.026 inches.

8. The container of claim 1, wherein the conical sidewall extends at an angle from the bottom between $5^0$ and $7^0$ degrees from the central axis.

9. The container of claim 1, wherein the container is fabricated from aluminum.

10. The container of claim 1, wherein the container is fabricated from a ferrous metal.

11. The container of claim 1, wherein an inside surface of the container is coated with PET Laminate, BPA Non Intent Liquid Coating.

12. The container of claim 1, wherein an outside surface of the container is coated with PET Laminate, BPA Non Intent Liquid Coating.

13. A metal container, comprising:

a top flange extending along a plane between an outside edge and a circular inside edge with a first diameter, the top flange centered on a central axis;

a cylindrical wall extending perpendicular to, and from, the inside edge of the top flange and being parallel to the central axis, the cylindrical wall terminating at a wall edge having the first diameter;

a bottom including a circular central wall parallel to the plane, the bottom being centered on the central axis, the central wall including a trough at its periphery, the bottom terminates at a bottom edge that has a second diameter that is less than the first diameter;

a conical sidewall extending from the wall edge to the bottom edge; and

a cover coupled to the circular inside edge of the top flange, the cover forming a hermetic seal that seals contents stored within the metal container.

14. The container of claim 13, wherein the cover extends from the inside edge to the outside edge of the top flange.

15. The container of claim 13, wherein the cover of the container is coated with PET Laminate, BPA Non Intent Liquid Coating, and wherein the cover comprises a metallic material.

16. The container of claim 13, further comprising a filter coupled to the top flange and extending within the cylindrical wall and the conical sidewall into an interior of the metal container.

17. A pierceable metal container, comprising:

a circular top flange laying within a plane and extending between an outside edge and a circular inside edge centered on a longitudinal, central axis, the circular inside edge having a first diameter;

an edge portion extending from the top flange outwardly from the central axis and bent inwardly toward the central axis, wherein a cross-sectional shape of the edge portion has a curved portion having a first radius;

a cylindrical wall extending perpendicular to, and from, the inside edge of the top flange and being parallel to the central axis, the cylindrical wall terminating at a wall edge having the first diameter;

a bottom including a circular central wall parallel to the top flange and centered upon the central axis, the central wall including a trough at its periphery, the trough including a depth and a cross sectional shape having a second radius with the trough terminating at a bottom edge having a second diameter being less than the first diameter;

a conical sidewall extending from the wall edge to the bottom edge;

a filter coupled to the circular top flange and extending through an interior volume of the container; the filter storing powdered contents that are instantly brewed and filtered when a liquid is inserted into the container; and

a cover encircling the circular inside edge of the top flange, the cover forming a hermetic seal that pressure seals contents stored within the metal container.

18. The container of claim 17, wherein the contents stored within the metal container are a liquid material.

19. The container of claim 17, wherein the powder contents stored within the metal container are an edible organic powder material that are sealed under a pressure differential.

20. The container of claim 19, wherein the powder material contents stored within the metal container are an instant coffee powder that brews in a single serve coffee maker and the pressure seal is a vacuum seal.

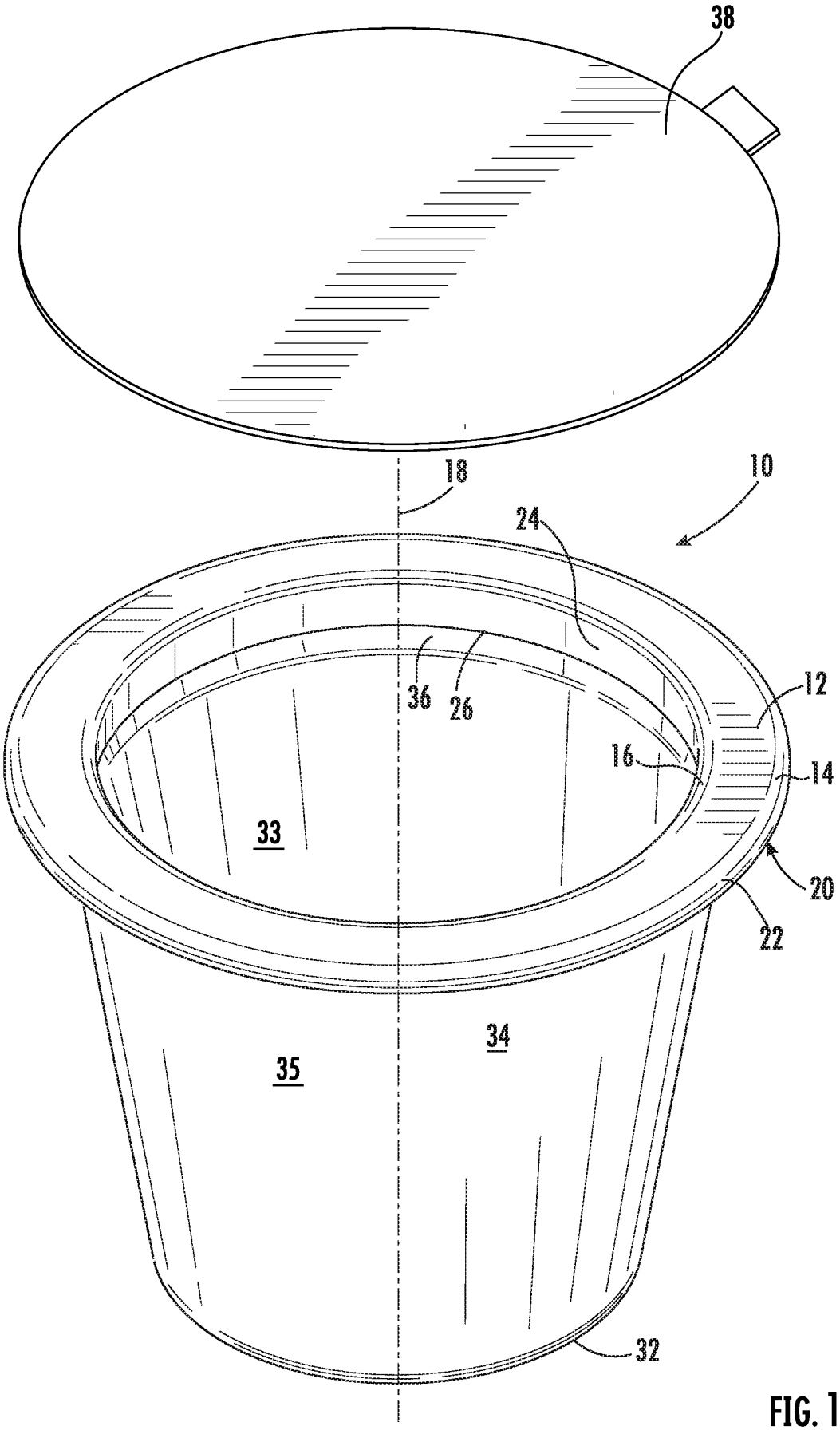


FIG. 1

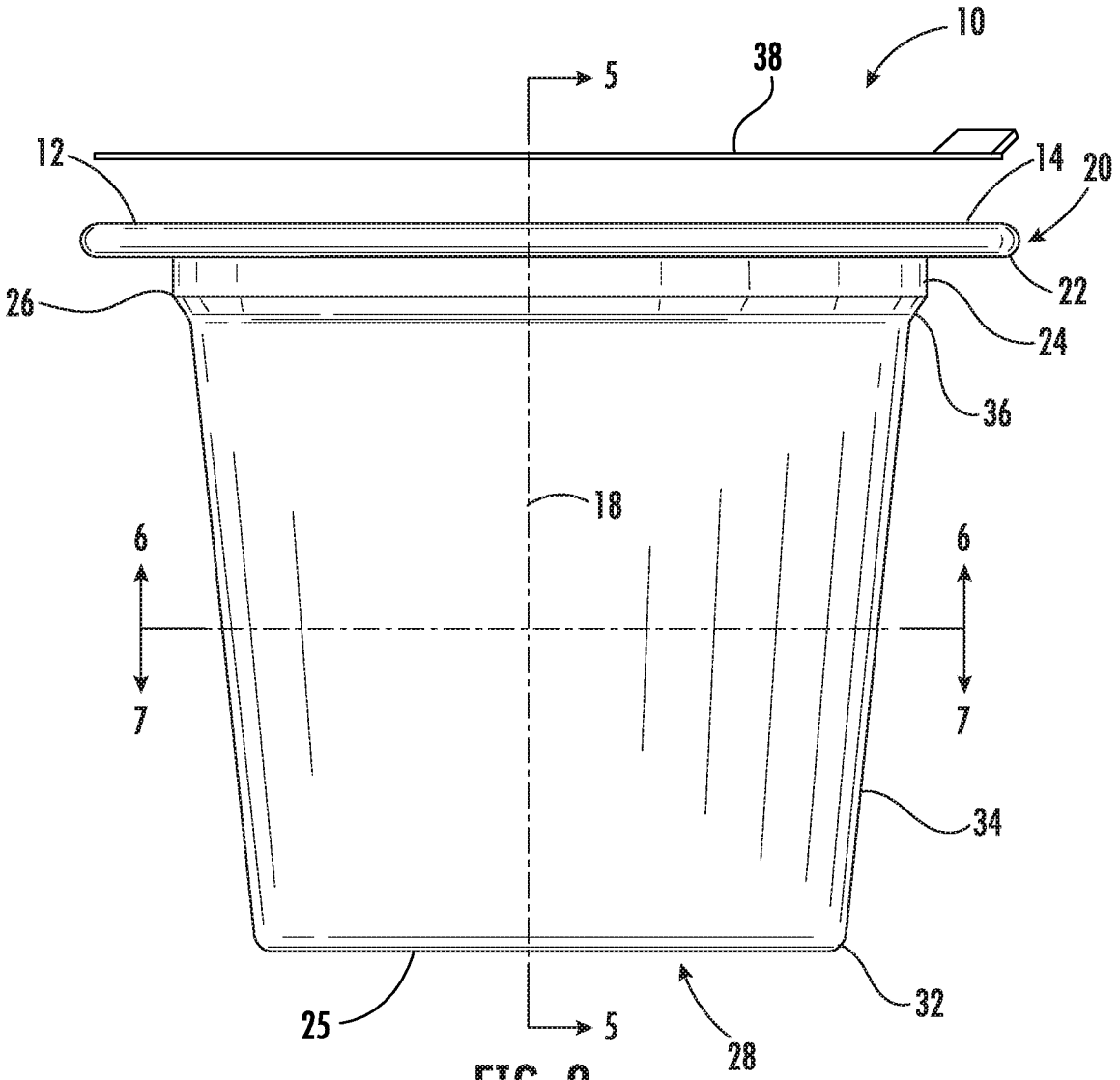


FIG. 2

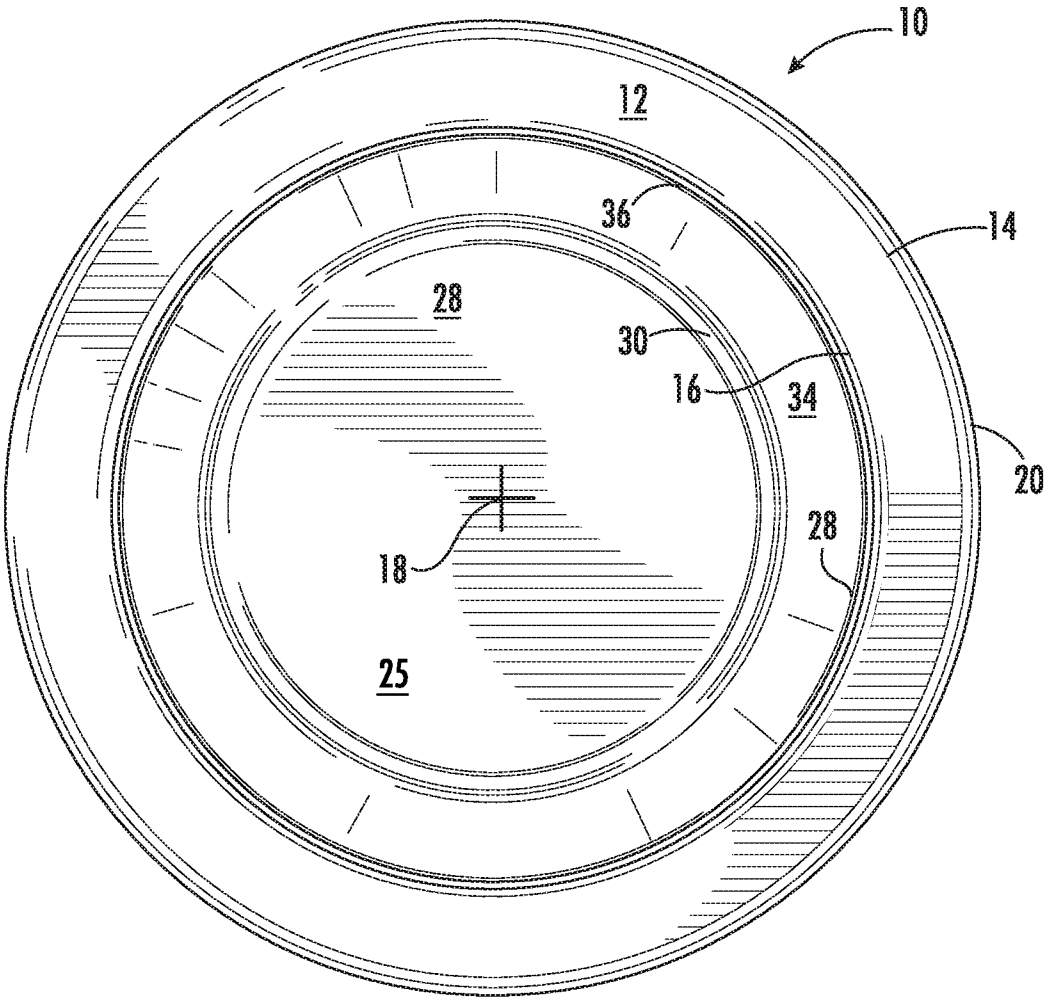


FIG. 3

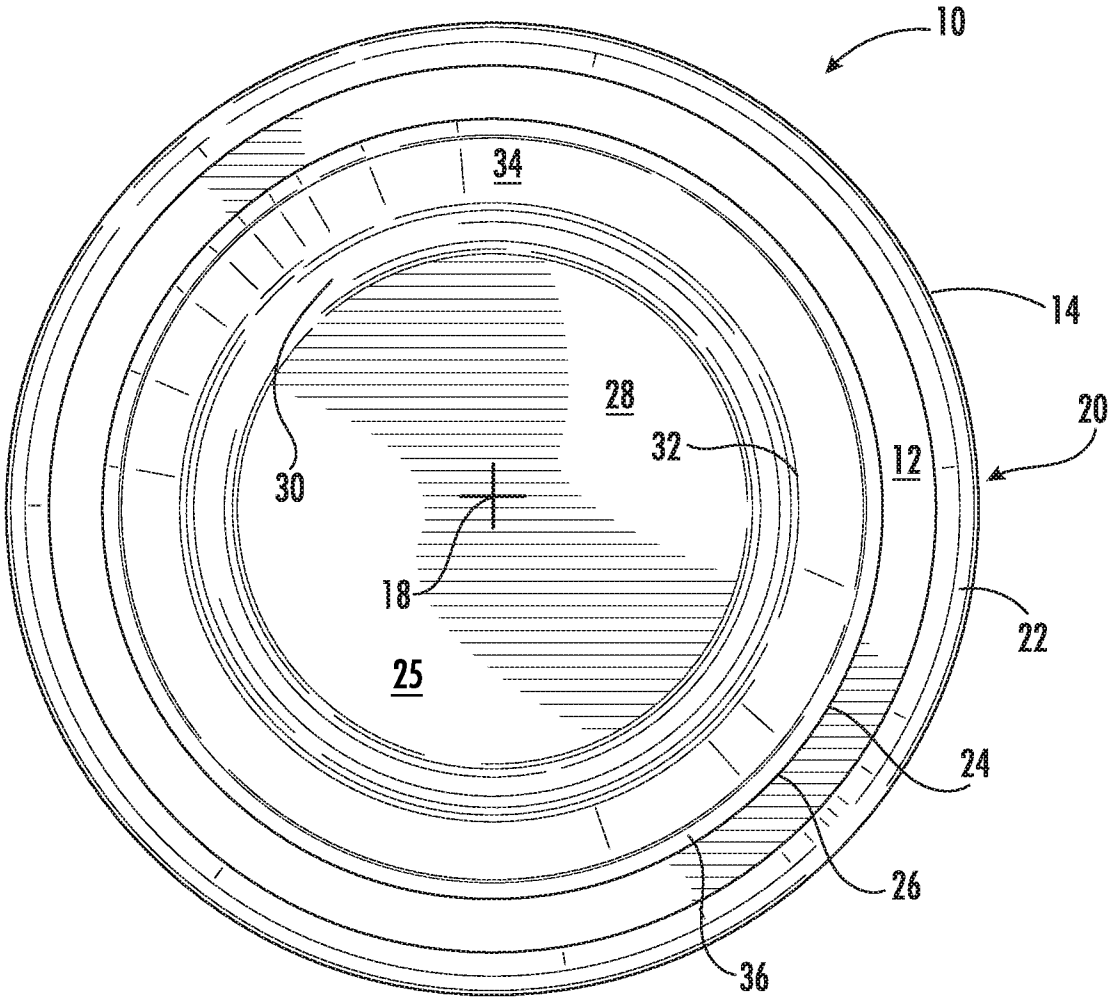


FIG. 4

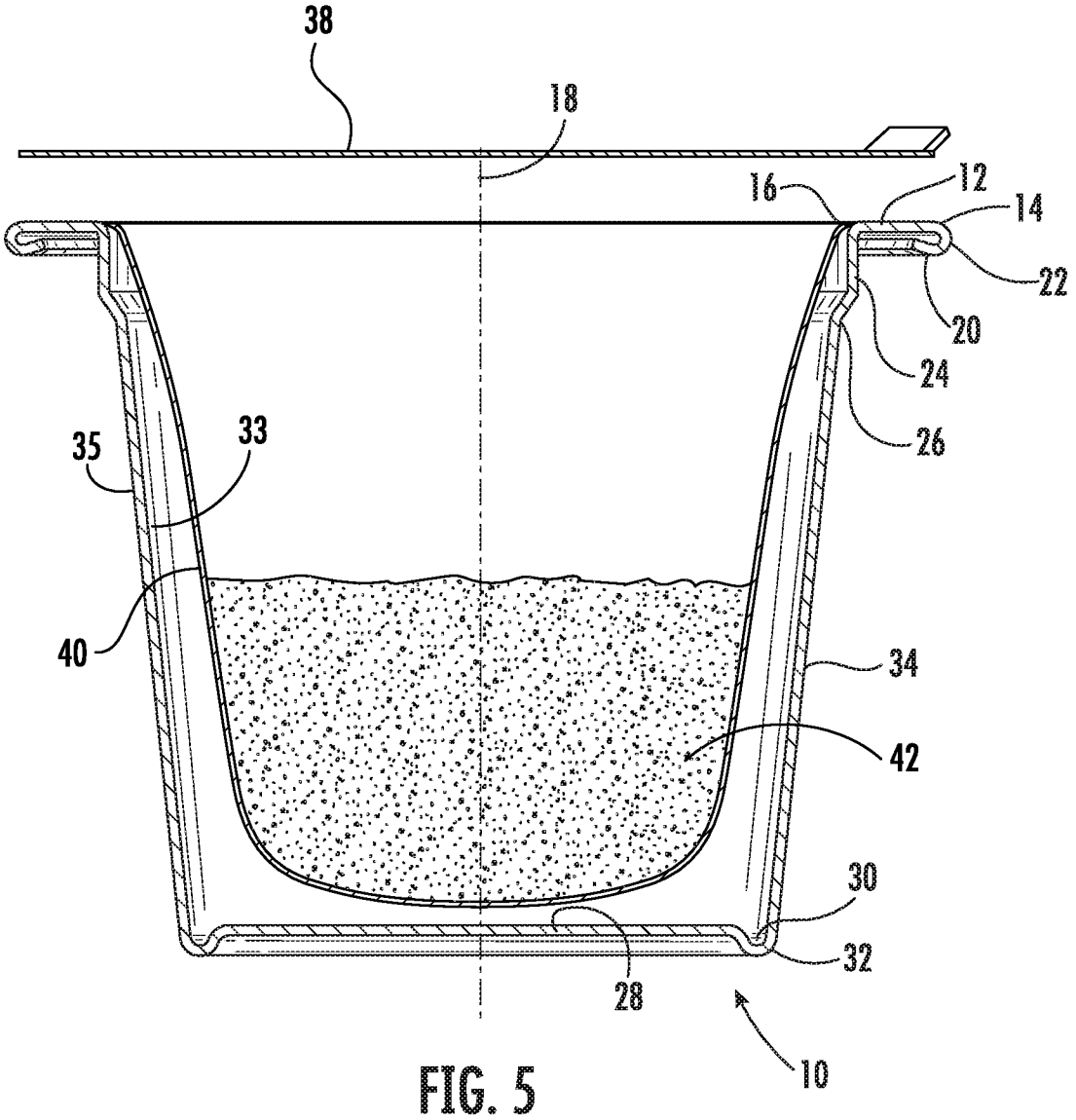


FIG. 5

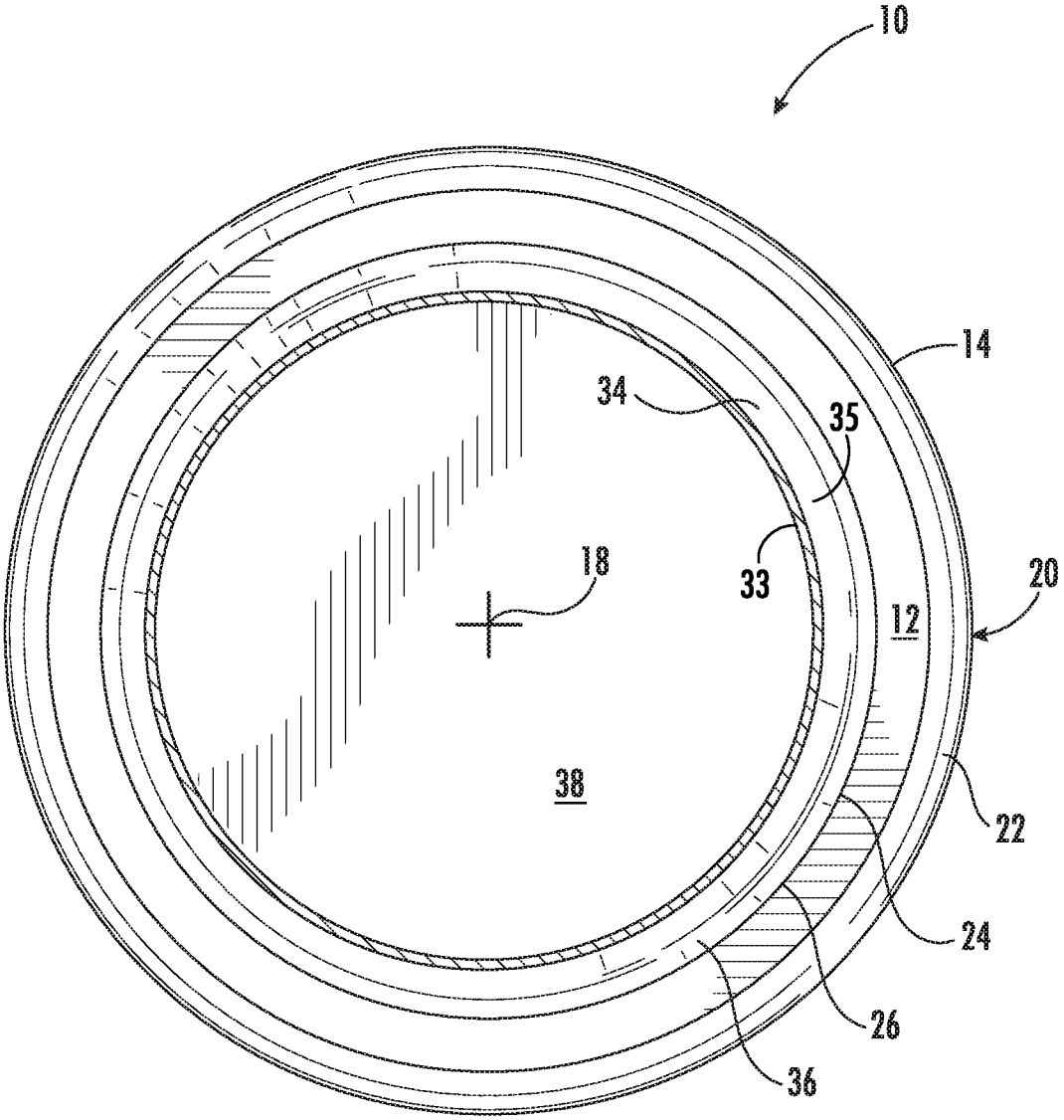


FIG. 6

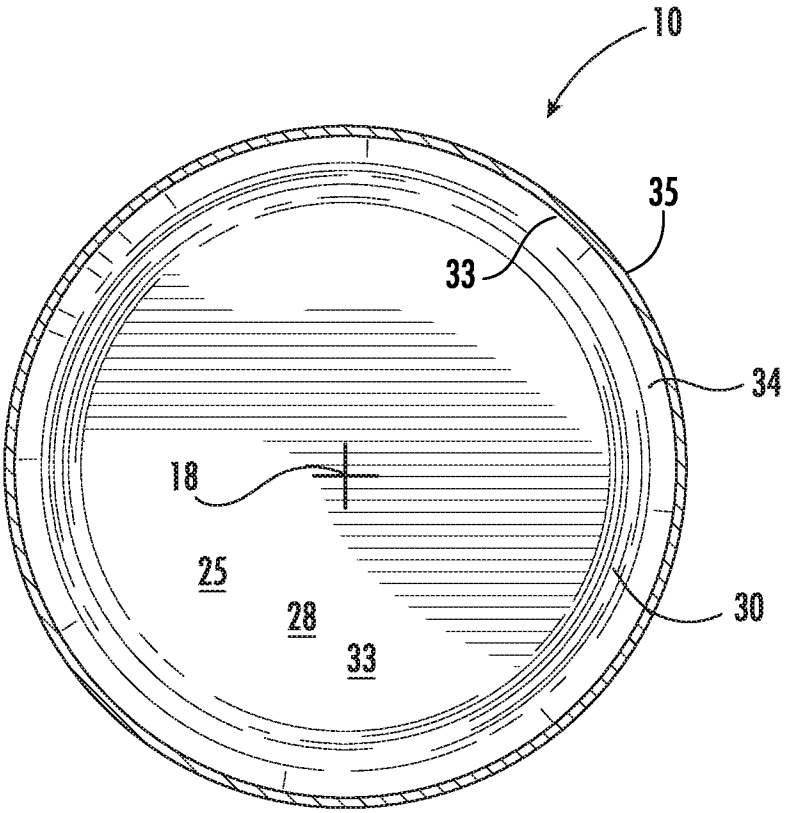


FIG. 7

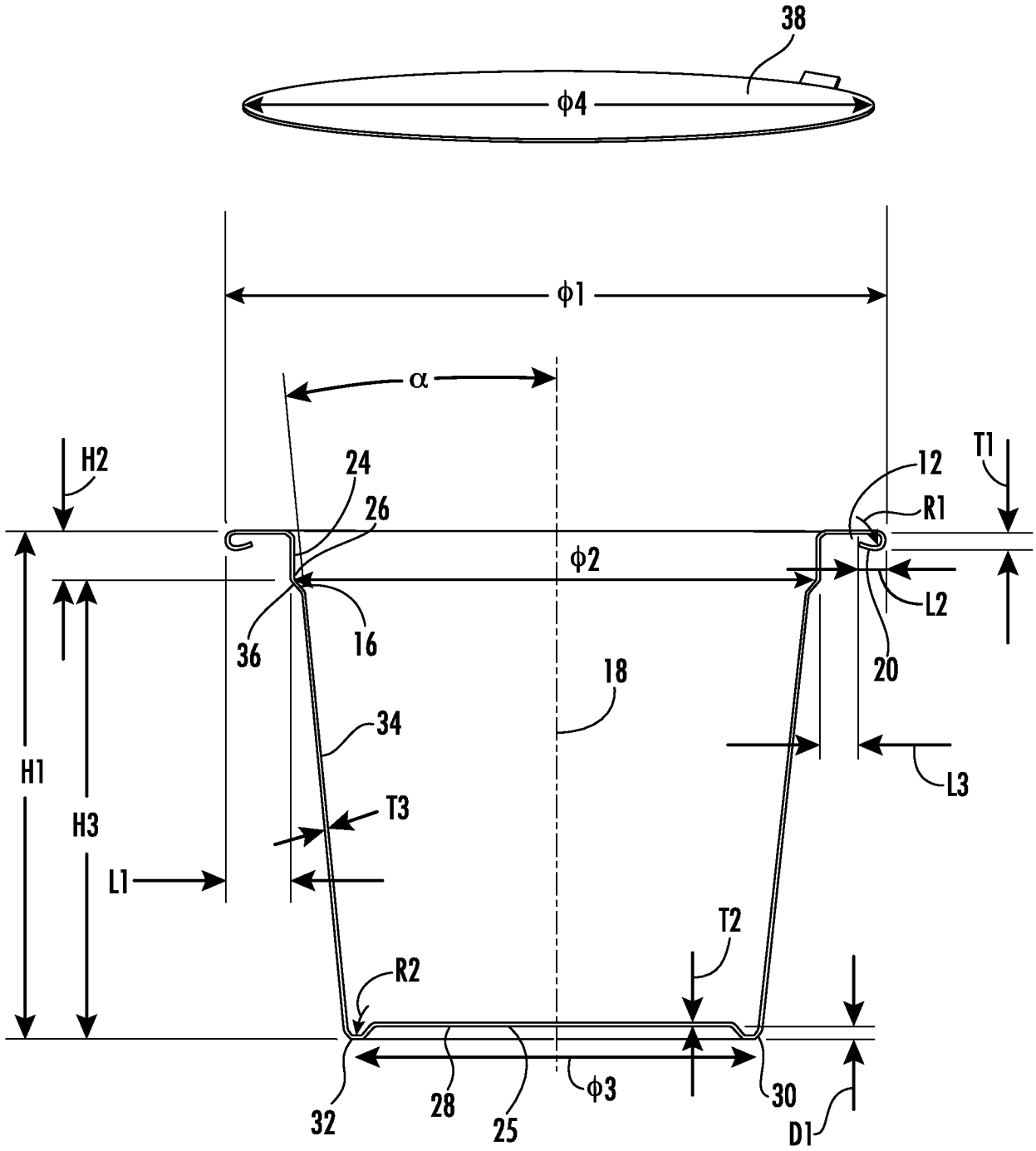
38
ϕ4
ϕ1
α
H2
24
26
12
T1
R1
ϕ2
L2
36
16
20
18
34
H1
H3
T3
L3
L1
T2
R2
32
28
25
ϕ3
30
D1

FIG. 8

**INTERNATIONAL SEARCH REPORT**

International application No.
**PCT/US2019/066931**

**A. CLASSIFICATION OF SUBJECT MATTER**

**B65D 85/72(2006.01)i, B65D 6/02(2006.01)i, B65D 51/00(2006.01)i**

According to International Patent Classification (IPC) or to both national classification and IPC

**B. FIELDS SEARCHED**

Minimum documentation searched (classification system followed by classification symbols)
B65D 85/72; A23G 1/56; A47J 31/40; B65D 1/09; B65D 1/26; B65D 81/00; B65D 85/804; B65D 6/02; B65D 51/00

Documentation searched other than minimum documentation to the extent that such documents are included in the fields searched
Korean utility models and applications for utility models
Japanese utility models and applications for utility models

Electronic data base consulted during the international search (name of data base and, where practicable, search terms used)
eKOMPASS(KIPO internal) & Keywords: pierceable, metal, container, flange, diameter, cover, filter, coffee, brew

**C. DOCUMENTS CONSIDERED TO BE RELEVANT**

| Category* | Citation of document, with indication, where appropriate, of the relevant passages | Relevant to claim No. |
|---|---|---|
| X | JP 2005-153894 A (SHOWA DENKO PACKAGING CO., LTD.) 16 June 2005<br>paragraphs [0014], [0016]-[0017] and figures 1-3 | 13-15 |
| Y | | 1-12,16-20 |
| Y | US 2015-0175347 A1 (K-FEE SYSTEM GMBH) 25 June 2015<br>paragraphs [0026], [0085], [0087]-[0088] and figures 3-4b | 1-12,16-20 |
| A | US 2018-0105355 A1 (SPRESSO NOVO CAP LTD.) 19 April 2018<br>paragraphs [0067]-[0068], claims 1, 11, 13, 23, and figures 1-6B | 1-20 |
| A | US 2016-0272414 A1 (MELTZ, LLC) 22 September 2016<br>claims 1, 4, 15 and figures 1E, 1G | 1-20 |
| A | EP 0468079 B1 (SOCIETE DES PRODUITS NESTLE S.A.) 18 September 1996<br>claims 1-2, 5-6 and figure 1 | 1-20 |

☐ Further documents are listed in the continuation of Box C.

☒ See patent family annex.

* Special categories of cited documents:
"A" document defining the general state of the art which is not considered to be of particular relevance
"D" document cited by the applicant in the international application
"E" earlier application or patent but published on or after the international filing date
"L" document which may throw doubts on priority claim(s) or which is cited to establish the publication date of another citation or other special reason (as specified)
"O" document referring to an oral disclosure, use, exhibition or other means
"P" document published prior to the international filing date but later than the priority date claimed
"T" later document published after the international filing date or priority date and not in conflict with the application but cited to understand the principle or theory underlying the invention
"X" document of particular relevance; the claimed invention cannot be considered novel or cannot be considered to involve an inventive step when the document is taken alone
"Y" document of particular relevance; the claimed invention cannot be considered to involve an inventive step when the document is combined with one or more other such documents,such combination being obvious to a person skilled in the art
"&" document member of the same patent family

| Date of the actual completion of the international search | Date of mailing of the international search report |
|---|---|
| 20 April 2020 (20.04.2020) | **20 April 2020 (20.04.2020)** |

| Name and mailing address of the ISA/KR | Authorized officer |
|---|---|
| International Application Division<br>Korean Intellectual Property Office<br>189 Cheongsa-ro, Seo-gu, Daejeon, 35208, Republic of Korea | HWANG, Chan Yoon |
| Facsimile No. +82-42-481-8578 | Telephone No. +82-42-481-3347 |

**INTERNATIONAL SEARCH REPORT**

Information on patent family members

International application No.

**PCT/US2019/066931**

| Patent document cited in search report | Publication date | Patent family member(s) | Publication date |
|---|---|---|---|
| JP 2005-153894 A | 16/06/2005 | None | |
| US 2015-0175347 A1 | 25/06/2015 | AU 2013-279478 A1 | 29/01/2015 |
| | | AU 2013-279478 B2 | 20/08/2015 |
| | | AU 2013-279478 C1 | 27/09/2018 |
| | | AU 2015-255218 A1 | 26/11/2015 |
| | | AU 2015-255218 B2 | 25/05/2017 |
| | | AU 2017-219060 A1 | 14/09/2017 |
| | | AU 2019-204741 A1 | 18/07/2019 |
| | | BR 112014031761 A2 | 27/06/2017 |
| | | CA 2877027 A1 | 27/12/2013 |
| | | CA 2877027 C | 20/02/2018 |
| | | CA 2989856 A1 | 27/12/2013 |
| | | CN 104411600 A | 11/03/2015 |
| | | CN 104411600 B | 23/06/2017 |
| | | CN 107380753 A | 24/11/2017 |
| | | DE 102012105282 A1 | 19/12/2013 |
| | | DK 2861508 T3 | 06/06/2017 |
| | | EP 2861508 A1 | 22/04/2015 |
| | | EP 2861508 B1 | 15/03/2017 |
| | | EP 3210911 A1 | 30/08/2017 |
| | | EP 3210911 B1 | 25/09/2019 |
| | | EP 3597566 A1 | 22/01/2020 |
| | | ES 2624597 T3 | 17/07/2017 |
| | | HK 1209394 A1 | 01/04/2016 |
| | | HR P20170738 T1 | 28/07/2017 |
| | | HU E034327 T2 | 28/02/2018 |
| | | JP 2015-527099 A | 17/09/2015 |
| | | JP 2019-093185 A | 20/06/2019 |
| | | KR 10-2015-0051213 A | 11/05/2015 |
| | | MX 2014015654 A | 20/03/2015 |
| | | MX 358999 B | 12/09/2018 |
| | | PL 2861508 T3 | 31/08/2017 |
| | | PT 2861508 T | 19/05/2017 |
| | | RS 55985 B1 | 29/09/2017 |
| | | RU 2015101159 A | 10/08/2016 |
| | | RU 2679588 C2 | 11/02/2019 |
| | | SG 10201702193 A | 30/05/2017 |
| | | SG 11201408446 A | 30/03/2015 |
| | | SI 2861508 T1 | 30/06/2017 |
| | | TN 2014000524 A1 | 30/03/2016 |
| | | US 10343838 B2 | 09/07/2019 |
| | | US 2016-0325921 A1 | 10/11/2016 |
| | | US 2019-0256280 A1 | 22/08/2019 |
| | | US 9394101 B2 | 19/07/2016 |
| | | WO 2013-189923 A1 | 27/12/2013 |
| | | ZA 201409527 B | 31/08/2016 |
| | | ZA 201509294 B | 29/11/2017 |

**INTERNATIONAL SEARCH REPORT**

Information on patent family members

International application No.

**PCT/US2019/066931**

| Patent document cited in search report | Publication date | Patent family member(s) | Publication date |
|---|---|---|---|
| US 2018-0105355 A1 | 19/04/2018 | AU 2016-254691 A1 | 02/11/2017 |
| | | CA 2981764 A1 | 03/11/2016 |
| | | EP 3288864 A1 | 07/03/2018 |
| | | EP 3288864 B1 | 06/11/2019 |
| | | EP 3617095 A1 | 04/03/2020 |
| | | RU 2017138122 A | 27/05/2019 |
| | | RU 2017138122 A3 | 10/06/2019 |
| | | RU 2699455 C2 | 05/09/2019 |
| | | WO 2016-174671 A1 | 03/11/2016 |
| US 2016-0272414 A1 | 22/09/2016 | AU 2016-235493 A1 | 05/10/2017 |
| | | AU 2017-250188 A1 | 01/11/2018 |
| | | AU 2017-315966 A1 | 21/03/2019 |
| | | CA 2980320 A1 | 29/09/2016 |
| | | CA 3020855 A1 | 19/10/2017 |
| | | CA 3034899 A1 | 01/03/2018 |
| | | CN 107466209 A | 12/12/2017 |
| | | CN 109310233 A | 05/02/2019 |
| | | CN 109890255 A | 14/06/2019 |
| | | EP 3270703 A1 | 24/01/2018 |
| | | EP 3442381 A1 | 20/02/2019 |
| | | EP 3503770 A1 | 03/07/2019 |
| | | JP 2018-515399 A | 14/06/2018 |
| | | JP 2019-517899 A | 27/06/2019 |
| | | JP 2019-531780 A | 07/11/2019 |
| | | KR 10-2017-0129813 A | 27/11/2017 |
| | | KR 10-2018-0133488 A | 14/12/2018 |
| | | KR 10-2019-0091256 A | 05/08/2019 |
| | | MX 2017012149 A | 21/02/2018 |
| | | MX 2018012521 A | 17/01/2019 |
| | | SG 11201707419 A | 30/10/2017 |
| | | SG 11201808980 A | 29/11/2018 |
| | | US 10111554 B2 | 30/10/2018 |
| | | US 10264912 B2 | 23/04/2019 |
| | | US 10314320 B2 | 11/06/2019 |
| | | US 2016-0270429 A1 | 22/09/2016 |
| | | US 2016-0270583 A1 | 22/09/2016 |
| | | US 2016-0270584 A1 | 22/09/2016 |
| | | US 2016-0288988 A1 | 06/10/2016 |
| | | US 2016-0288990 A1 | 06/10/2016 |
| | | US 2017-0000151 A1 | 05/01/2017 |
| | | US 2017-0055557 A1 | 02/03/2017 |
| | | US 2017-0055761 A1 | 02/03/2017 |
| | | US 2017-0065121 A1 | 09/03/2017 |
| | | US 2018-042258 A1 | 15/02/2018 |
| | | US 9346611 B1 | 24/05/2016 |
| | | US 9408492 B1 | 09/08/2016 |
| | | US 9408493 B1 | 09/08/2016 |
| | | US 9468230 B2 | 18/10/2016 |
| | | US 9487348 B2 | 08/11/2016 |

| Patent document cited in search report | Publication date | Patent family member(s) | Publication date |
|---|---|---|---|
| | | US 9516970 B2 | 13/12/2016 |
| | | US 9538877 B2 | 10/01/2017 |
| | | US 9615597 B2 | 11/04/2017 |
| | | US 9630770 B2 | 25/04/2017 |
| | | US 9675203 B2 | 13/06/2017 |
| | | WO 2016-154037 A1 | 29/09/2016 |
| | | WO 2017-180710 A1 | 19/10/2017 |
| | | WO 2018-039675 A1 | 01/03/2018 |
| EP 0468079 B1 | 18/09/1996 | AT 142974 T | 15/10/1996 |
| | | AU 655184 B2 | 08/12/1994 |
| | | AU 8032891 A | 30/01/1992 |
| | | BR 9102993 A | 18/02/1992 |
| | | CA 2046558 A1 | 28/01/1992 |
| | | DE 69028628 T2 | 30/01/1997 |
| | | DK 0468079 T3 | 03/03/1997 |
| | | EP 0468079 A1 | 29/01/1992 |
| | | ES 2091780 T3 | 16/11/1996 |
| | | FI 913270 A | 28/01/1992 |
| | | FI 96738 B | 15/05/1996 |
| | | FI 96738 C | 26/08/1996 |
| | | GR 3021816 T3 | 28/02/1997 |
| | | JP 04-236920 A | 25/08/1992 |
| | | JP 2784282 B2 | 06/08/1998 |
| | | MX 9100373 A | 28/02/1992 |
| | | NO 303170 B1 | 08/06/1998 |
| | | NO 912910 L | 28/01/1992 |
| | | NZ 238935 A | 27/06/1994 |
| | | PT 98458 A | 30/09/1993 |
| | | PT 98458 B | 29/01/1999 |
| | | ZA 9105420 B | 29/04/1992 |