US008875169B2

(12) **United States Patent**
Yamagishi

(10) **Patent No.: US 8,875,169 B2**
(45) **Date of Patent: Oct. 28, 2014**

(54) **TRANSMISSION AND RECEPTION APPARATUS, METHODS, AND SYSTEMS FOR FILTERING CONTENT**

(75) Inventor: **Yasuaki Yamagishi**, Kanagawa (JP)

(73) Assignee: **Sony Corporation**, Tokyo (JP)

(*) Notice: Subject to any disclaimer, the term of this patent is extended or adjusted under 35 U.S.C. 154(b) by 198 days.

(21) Appl. No.: **13/071,238**

(22) Filed: **Mar. 24, 2011**

(65) **Prior Publication Data**

US 2012/0054783 A1 Mar. 1, 2012

Related U.S. Application Data

(60) Provisional application No. 61/377,808, filed on Aug. 27, 2010.

(51) **Int. Cl.**

H04H 60/33	(2008.01)
H04N 21/45	(2011.01)
H04N 21/475	(2011.01)
H04N 21/236	(2011.01)
H04N 21/2668	(2011.01)
H04N 21/454	(2011.01)
H04N 21/8543	(2011.01)
H04H 60/65	(2008.01)
H04H 60/73	(2008.01)

(52) **U.S. Cl.**

CPC ***H04N 21/4758*** (2013.01); ***H04N 21/4532*** (2013.01); *H04N 21/8543* (2013.01); ***H04N 21/23614*** (2013.01); ***H04N 21/2668*** (2013.01); ***H04N 60/33*** (2013.01); ***H04N 21/454*** (2013.01); ***H04N 21/4755*** (2013.01); *H04H 60/65* (2013.01); *H04H 60/73* (2013.01)

USPC **725/13**; 725/9

(58) **Field of Classification Search**

CPC H04N 21/4758; H04N 21/25891; H04N 21/44222; H04N 21/6582; H04N 7/17318; H04H 60/33; H04H 60/66

USPC 725/9, 13

See application file for complete search history.

(56) **References Cited**

U.S. PATENT DOCUMENTS

5,915,243	A *	6/1999	Smolen	705/14.19
2002/0124253	A1 *	9/2002	Eyer et al.	725/34

(Continued)

FOREIGN PATENT DOCUMENTS

JP	2002-175326	6/2002
JP	2009-178363	8/2009
JP	2010-21988	1/2010

OTHER PUBLICATIONS

International Search Report issued Sep. 27, 2011, in Patent Application No. PCT/JP2011/068678 (with English-language translation).

(Continued)

Primary Examiner — Mulugeta Mengesha

(74) *Attorney, Agent, or Firm* — Oblon, Spivak, McClelland, Maier & Neustadt, L.L.P.

(57) **ABSTRACT**

Disclosed herein is a transmission apparatus for distributing a content to a client, including: a question generation section configured to generate question information representative of a question regarding liking of a user of the client; and a transmission section configured to transmit the question information and provider side answer information in the form of a bit string representative of an answer set by a provider which provides the content to the question regarding the liking of the user to the client.

13 Claims, 68 Drawing Sheets

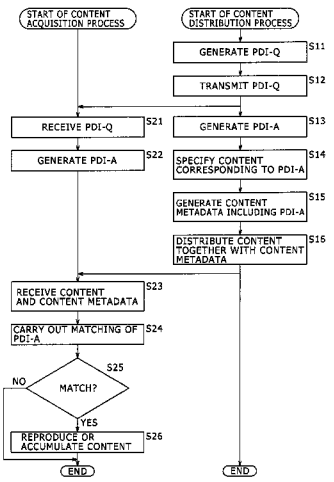

(56) **References Cited**

U.S. PATENT DOCUMENTS

2003/0004884	A1	1/2003	Kitazato	
2003/0144899	A1 *	7/2003	Kokubo	705/10
2004/0172650	A1	9/2004	Hawkins et al.	
2005/0278741	A1 *	12/2005	Robarts et al.	725/46
2007/0124755	A1 *	5/2007	Shintani	725/13
2008/0090513	A1	4/2008	Collins et al.	
2009/0018915	A1	1/2009	Fisse	
2011/0231868	A1 *	9/2011	Martens	725/13
2011/0247028	A1 *	10/2011	Eyer	725/13

OTHER PUBLICATIONS

U.S. Appl. No. 13/238,138, filed Sep. 21, 2011, Kitazato.
U.S. Appl. No. 13/238,264, filed Sep. 21, 2011, Kitazato.
U.S. Appl. No. 13/238,080, filed Sep. 21, 2011, Kitazato et al.
U.S. Appl. No. 13/238,277, filed Sep. 21, 2011, Kitazato.
U.S. Appl. No. 13/239,871, filed Sep. 22, 2011, Kitazato.
U.S. Appl. No. 13/238,605, filed Sep. 21, 2011, Kitazato.
U.S. Appl. No. 13/220,231, filed Aug. 29, 2011, Kitahara, et al.
U.S. Appl. No. 13/071,551, filed Mar. 21, 2011, Kitazato, et al.
U.S. Appl. No. 13/081,566, filed Apr. 7, 2011, Kitazato, et al.
U.S. Appl. No. 13/107,604, filed May 13, 2011, Dewa.
U.S. Appl. No. 13/075,440, filed Mar. 30, 2011, Yamagishi, et al.
U.S. Appl. No. 13/071,559, filed Mar. 25, 2011, Yamagishi, et al.
U.S. Appl. No. 13/071,560, filed Mar. 25, 2011, Yamagishi, et al.
U.S. Appl. No. 13/080,866, filed Apr. 6, 2011, Kitazato, et al.
Extended European Search Report issued May 14, 2014, in European Patent Application No. 11819852.2.

* cited by examiner

FIG. 1

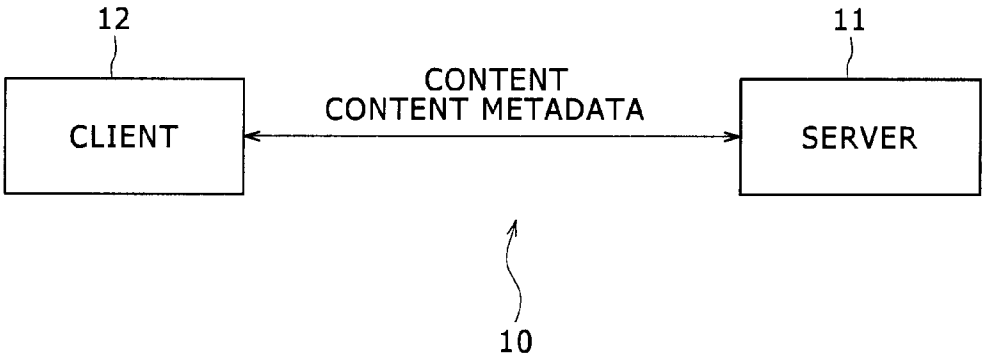

FIG. 2

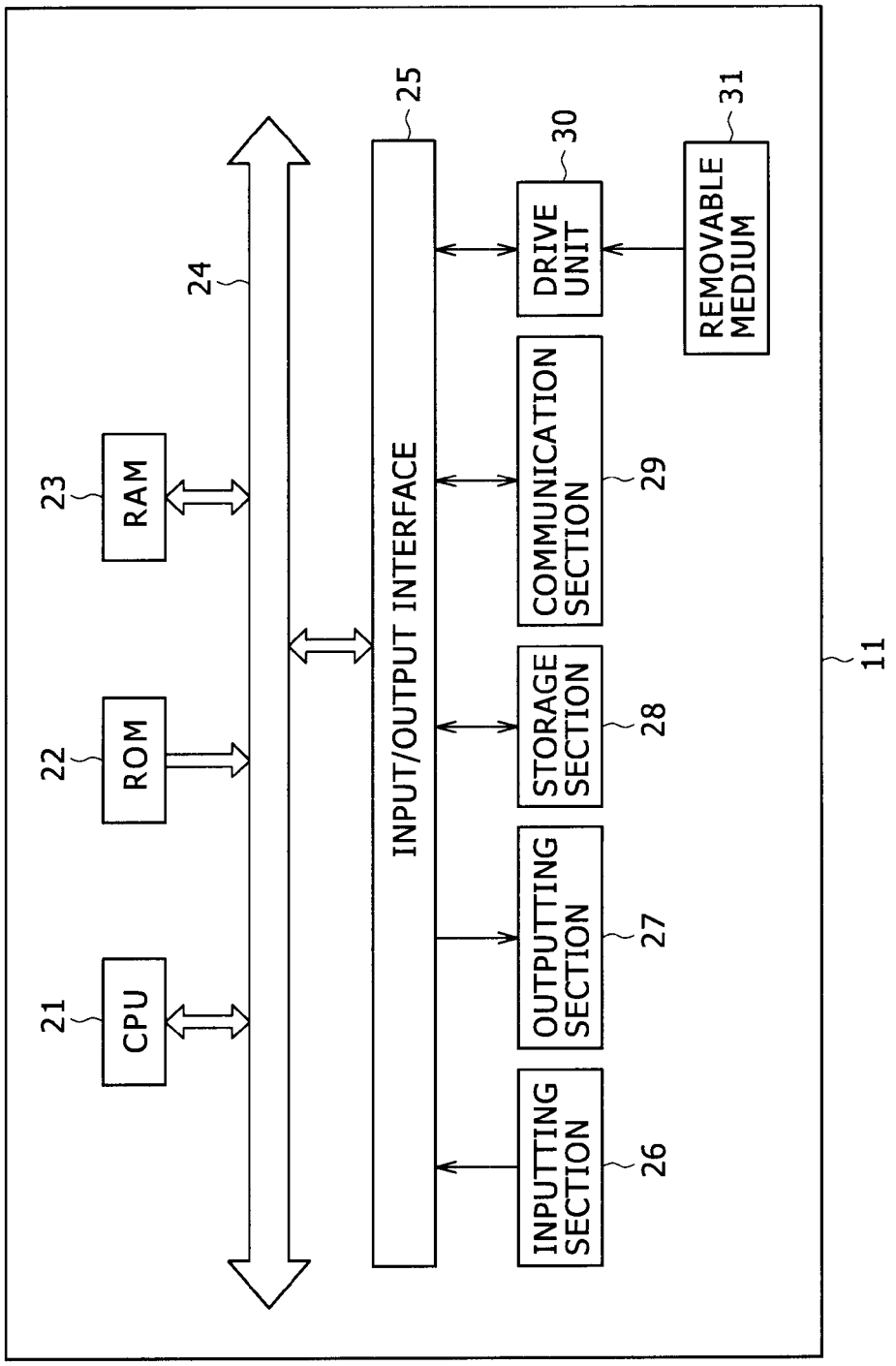
11
CPU
21
ROM
22
RAM
23
24
INPUT/OUTPUT INTERFACE
25
INPUTTING SECTION
26
OUTPUTTING SECTION
27
STORAGE SECTION
28
COMMUNICATION SECTION
29
DRIVE UNIT
30
REMOVABLE MEDIUM
31

FIG. 3

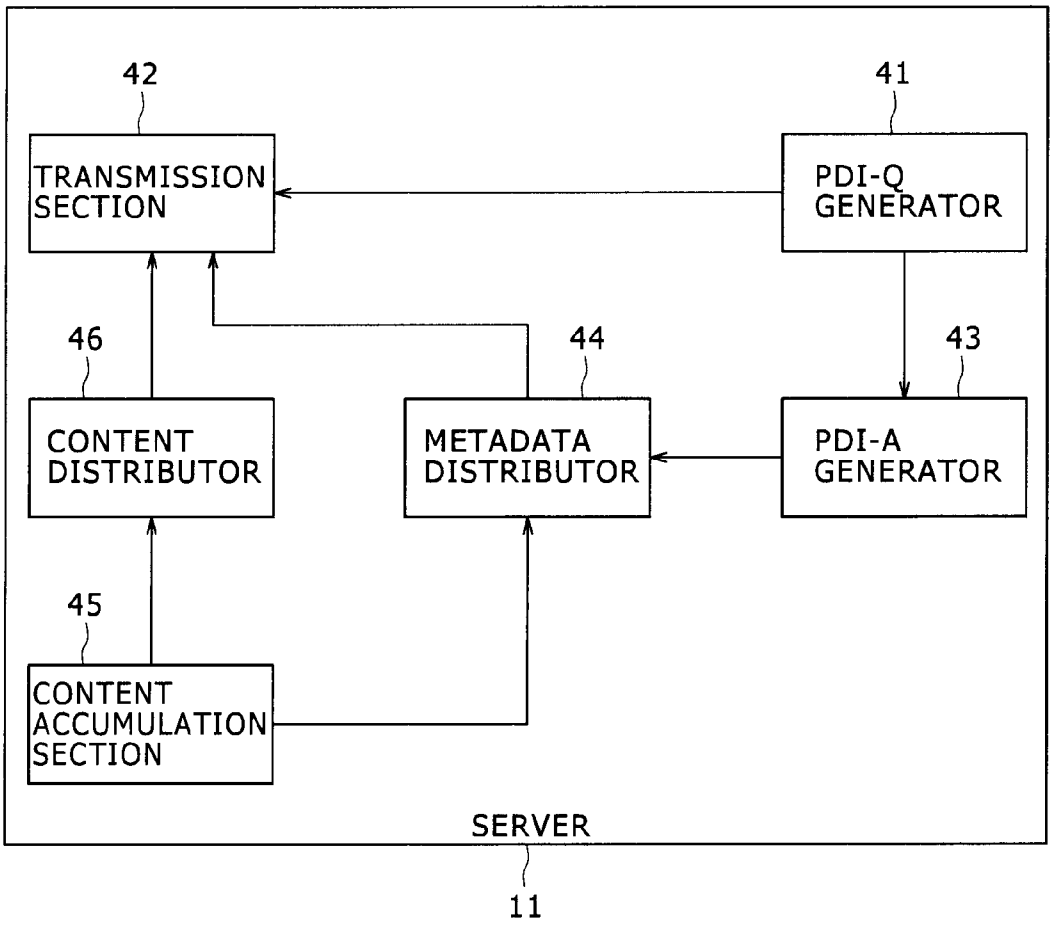
42
41
TRANSMISSION SECTION
PDI-Q GENERATOR
46
44
43
CONTENT DISTRIBUTOR
METADATA DISTRIBUTOR
PDI-A GENERATOR
45
CONTENT ACCUMULATION SECTION
SERVER
11

FIG. 4

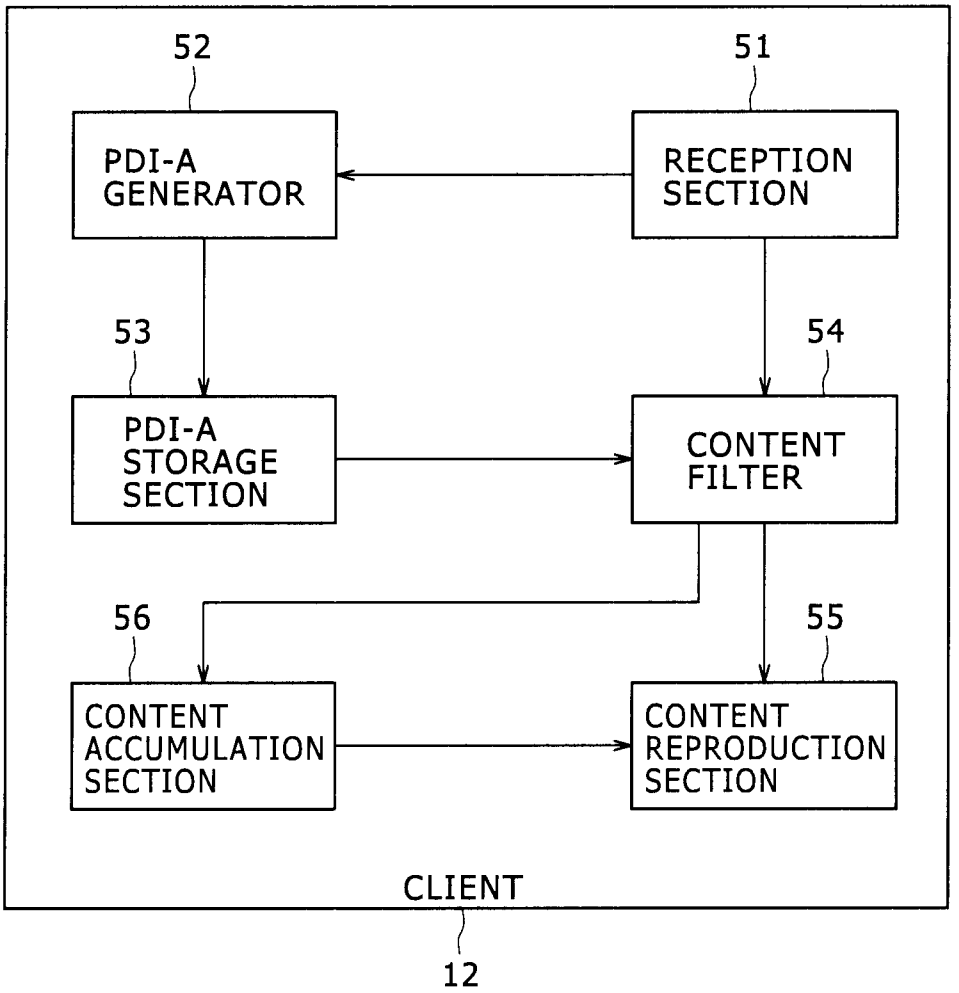
52
51
PDI-A GENERATOR
RECEPTION SECTION
53
54
PDI-A STORAGE SECTION
CONTENT FILTER
56
55
CONTENT ACCUMULATION SECTION
CONTENT REPRODUCTION SECTION
CLIENT
12

FIG. 5

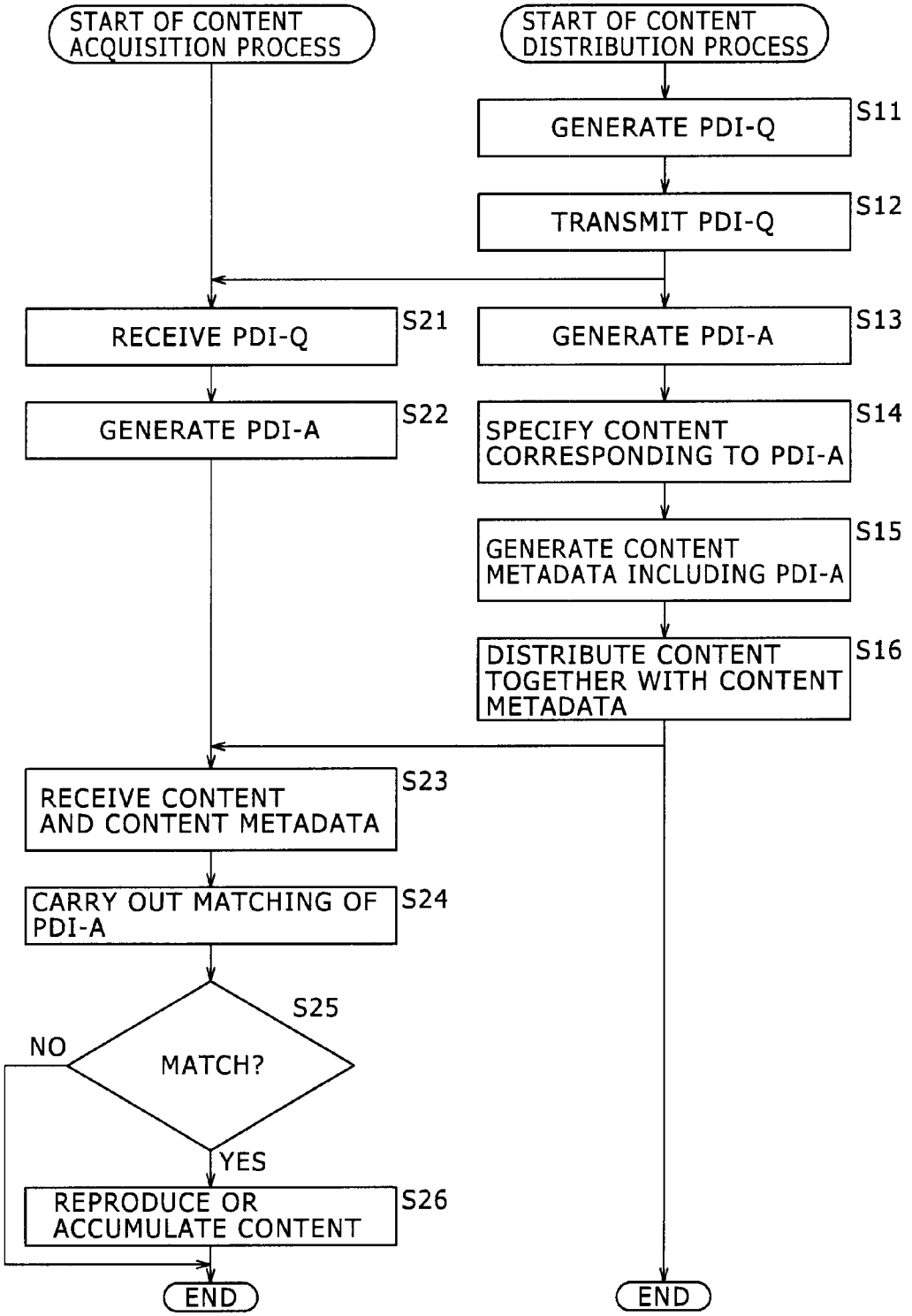
START OF CONTENT ACQUISITION PROCESS
START OF CONTENT DISTRIBUTION PROCESS
GENERATE PDI-Q
S11
TRANSMIT PDI-Q
S12
RECEIVE PDI-Q
S21
GENERATE PDI-A
S13
GENERATE PDI-A
S22
SPECIFY CONTENT CORRESPONDING TO PDI-A
S14
GENERATE CONTENT METADATA INCLUDING PDI-A
S15
DISTRIBUTE CONTENT TOGETHER WITH CONTENT METADATA
S16
RECEIVE CONTENT AND CONTENT METADATA
S23
CARRY OUT MATCHING OF PDI-A
S24
S25
MATCH?
NO
YES
REPRODUCE OR ACCUMULATE CONTENT
S26
END
END

FIG. 6 A

```
1 : <xs:schema xmlns:xs="http://www.w3.org/2001/XMLSchema" elementFormDefault="qualified"
    attributeFormDefault="unqualified")
2 :         <xs:element name="PDItable" type="PDItableType"/>
3:        <xs:complexType name="PDItableType">
4:                  <xs:choice maxOccurs="unbounded">
5:                          <xs:element name="QIA" type="IntegerAnswerType"/>
6:                          <xs:element name="QBA" type="BooleanAnswerType"/>
7:                          <xs:element name="QSA" type="SelectionAnswerType"/>
8:                          <xs:element name="QTA" type="TextAnswerType"/>
9:                          <xs:element name="QAA" type="AnyAnswerType"/>
10:                 </xs:choice>
11:                 <xs:attribute name="transactional" type="xs:boolean" use="optional"/>
12:       </xs:complexType>
13:       <xs:complexType name="IntegerAnswerType">
14:                 <xs:sequence>
15:                         <xs:element name="id" type="xs:anyURI"/>
16:                         <xs:element name="q" type="xs:string" minOccurs="0"/>
17:                         <xs:element name="a" type="xs:integer" minOccurs="0"/>
18:                 </xs:sequence>
19:                 <xs:attribute name="minInclusive" type="xs:integer" use="optional"/>
20:                 <xs:attribute name="maxInclusive" type="xs:integer" use="optional"/>
21:       </xs:complexType>
22:       <xs:complexType name="BooleanAnswerType">
23:                 <xs:sequence>
24:                         <xs:element name="id" type="xs:anyURI"/>
25:                         <xs:element name="q" type="xs:string" minOccurs="0"/>
26:                         <xs:element name="a" type="xs:boolean" minOccurs="0"/>
27:                 </xs:sequence>
28:       </xs:complexType>
29:       <xs:complexType name=""SelectionAnswerType">
30:                 <xs:sequence>
31:                         <xs:element name="id" type="xs:anyURI"/>
32:                         <xs:element name="q" type="xs:string" minOccurs="0"/>
33:                         <xs:element name="a" type="xs:string" minOccurs="0"
    maxOccurs="unbounded"/>
```

FIG. 6 B

```
34:                    </xs:sequence>
35:                    <xs:attribute name="minChoice" type="xs:integer" use="optional"/>
36:                    <xs:attribute name="maxChoice" type="xs:integer" use="optional"/>
37:        </xs:complexType>
38:        <xs:complexType name="TextAnswerType">
39:                    <xs:sequence>
40:                              <xs:element name="id" type="xs:anyURI"/>
41:                              <xs:element name="q" type="xs:string" minOccurs="0"/>
42:                              <xs:element name="a" type="xs:string" minOccurs="0"/>
43:                    </xs:sequence>
44:        </xs:complexType>
45:  </xs:schema>
```

FIG. 7

```
1 : <PDItable  transactional="true" >
2 :     <QBA>
3 :                 <id>Common:111</id>
4 :                 <q>Are you currently employed?</q>
5 :     </QBA>
6 :     <QIA minInclusive="10" maxInclusive="100">
7 :                 <id>Common:222</id>
8 :                 <q>What is the age of the oldest member of the household who watches television?</q>
9 :     </QIA>
10 :    <QSA minChoice="1" maxChoice="3">
11 :                <id>ProviderA:123</id>
12 :                <q>In which of the following sports are you most interested? (Multiple selection allowed)</q>
13 :                <a>Baseball</a>
14 :                <a>Basketball</a>
15 :                <a>Soccer</a>
16 :                <a>Hockey</a>
17 :    </QSA>
18 :    <QSA maxChoice="1">
19 :                <id>ProviderA:ProgramX:123</id>
20 :                <q>Do you enjoy camping and outdoor recreation?(Only one selection)</q>
21 :                <a>Never</a>
22 :                <a>Occasionally</a>
23 :                <a>Frequently</a>
24 :    </QSA>
25 :    <QTA>
26 :                <id>ProviderA:321</id>
27 :                <q> Who's products are you most interested in recently? </q>
28 :    </QTA>
29 : </PDItable>
```

FIG. 8

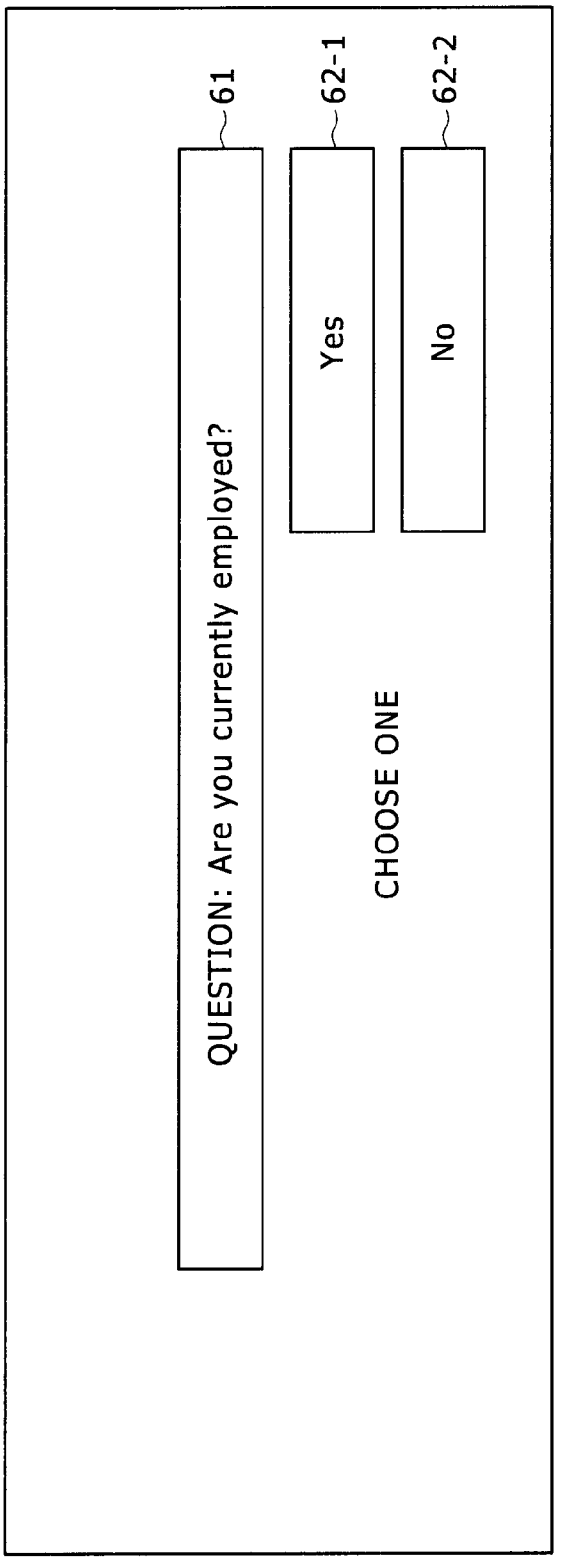
61
62-1
62-2
QUESTION: Are you currently employed?
Yes
No
CHOOSE ONE

FIG. 9

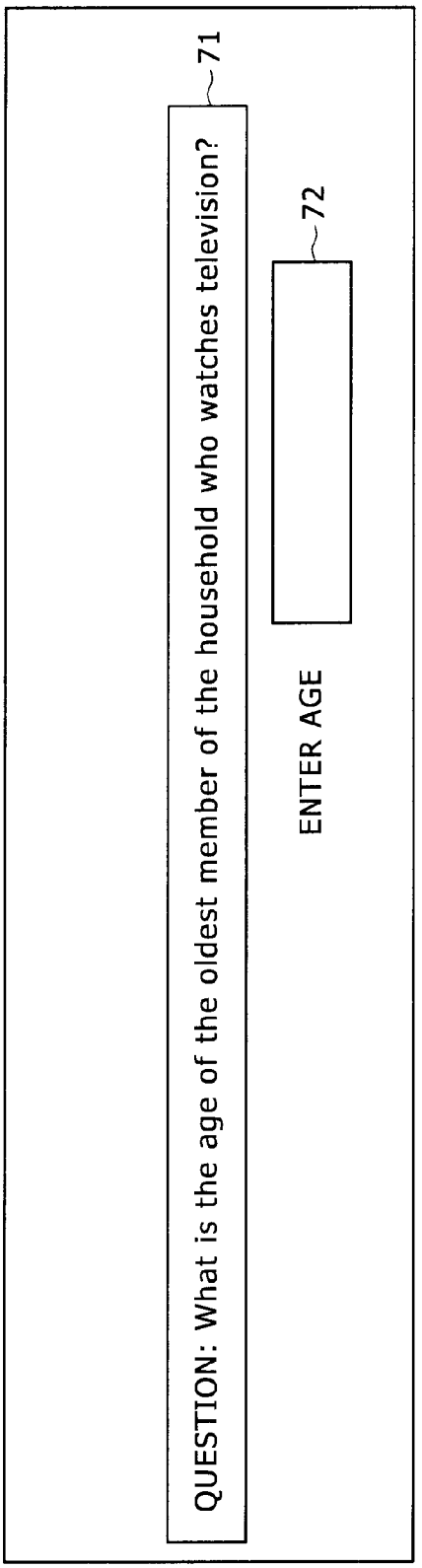
71
QUESTION: What is the age of the oldest member of the household who watches television?
72
ENTER AGE

FIG.10

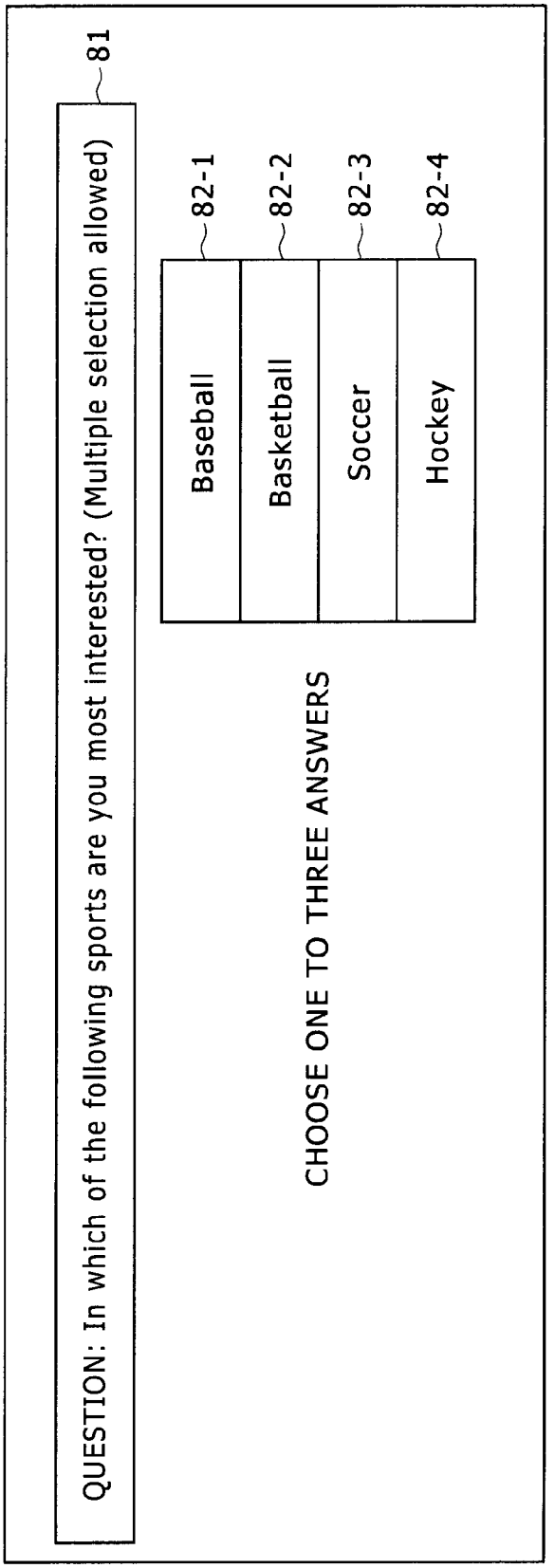
81
QUESTION: In which of the following sports are you most interested? (Multiple selection allowed)
82-1
Baseball
82-2
Basketball
82-3
Soccer
82-4
Hockey
CHOOSE ONE TO THREE ANSWERS

FIG. 11

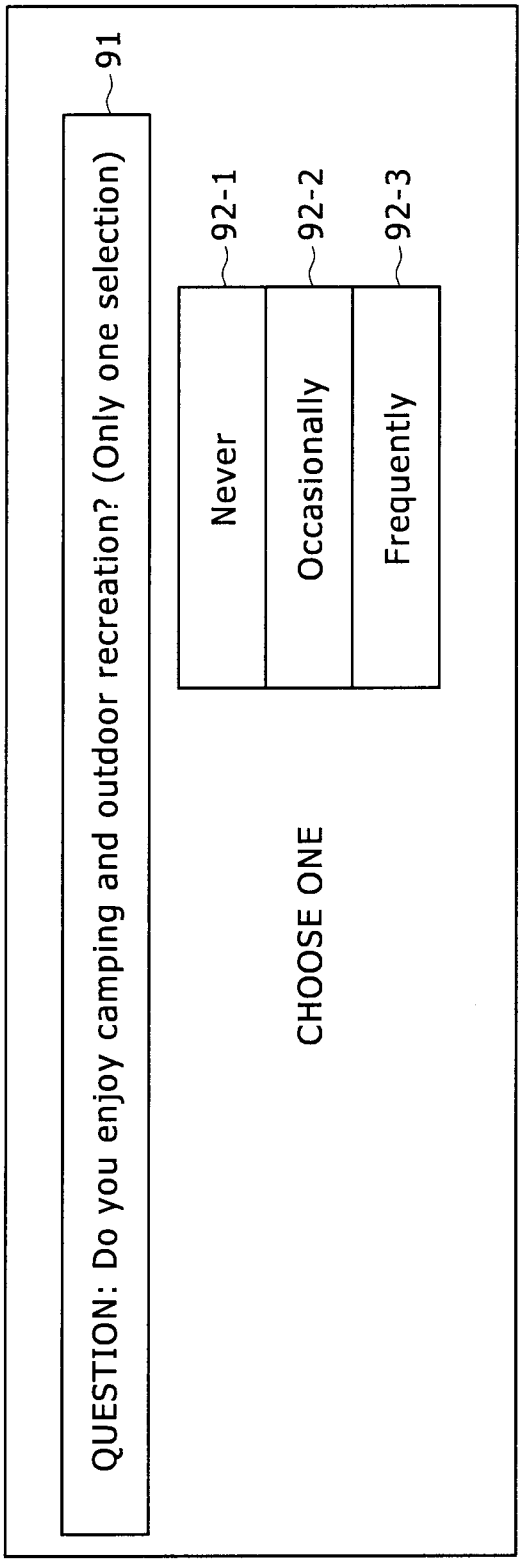
91
QUESTION: Do you enjoy camping and outdoor recreation? (Only one selection)
92-1
92-2
92-3
Never
Occasionally
Frequently
CHOOSE ONE

FIG. 12

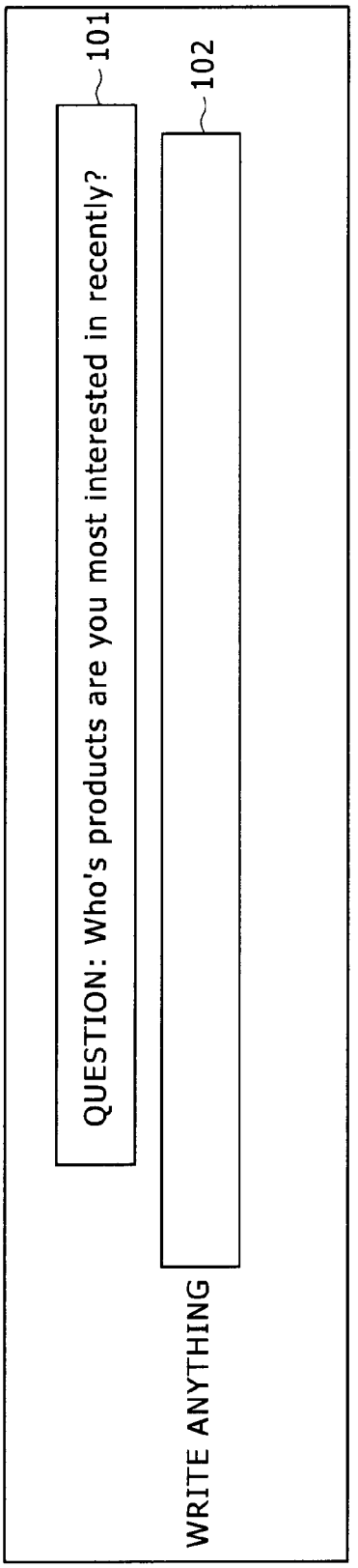
101
102
QUESTION: Who's products are you most interested in recently?
WRITE ANYTHING

FIG.13

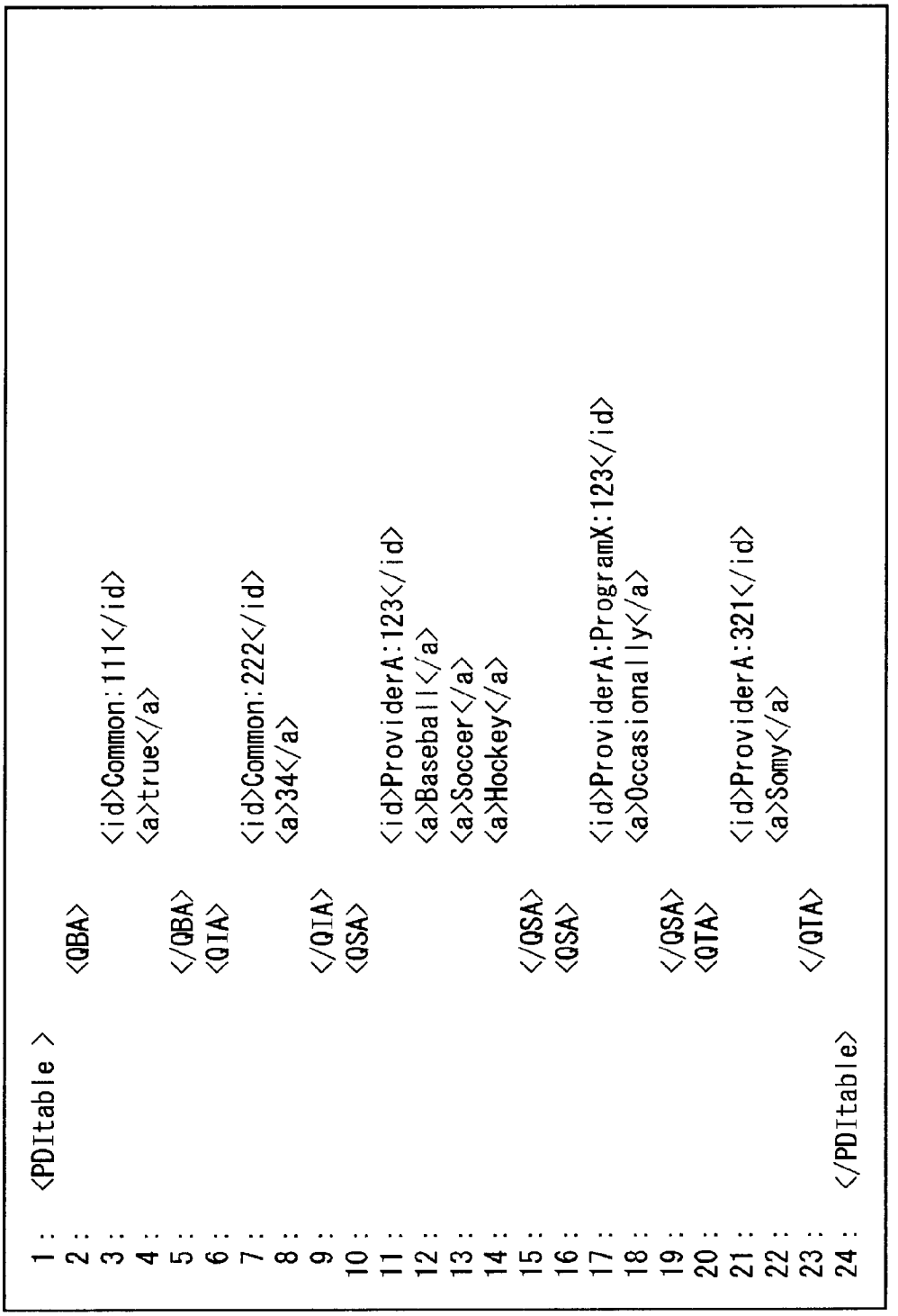

```
1 : <PDItable >
2 :
3 :     <QBA>
4 :         <id>Common:111</id>
5 :         <a>true</a>
6 :     </QBA>
7 :     <QIA>
8 :         <id>Common:222</id>
9 :         <a>34</a>
10 :    </QIA>
11 :    <QSA>
12 :        <id>ProviderA:123</id>
13 :        <a>Baseball</a>
14 :        <a>Soccer</a>
15 :        <a>Hockey</a>
16 :    </QSA>
17 :    <QSA>
18 :        <id>ProviderA:ProgramX:123</id>
19 :        <a>Occasionally</a>
20 :    </QSA>
21 :    <QTA>
22 :        <id>ProviderA:321</id>
23 :        <a>Somy</a>
24 :    </QTA>
</PDItable>
```

FIG. 14

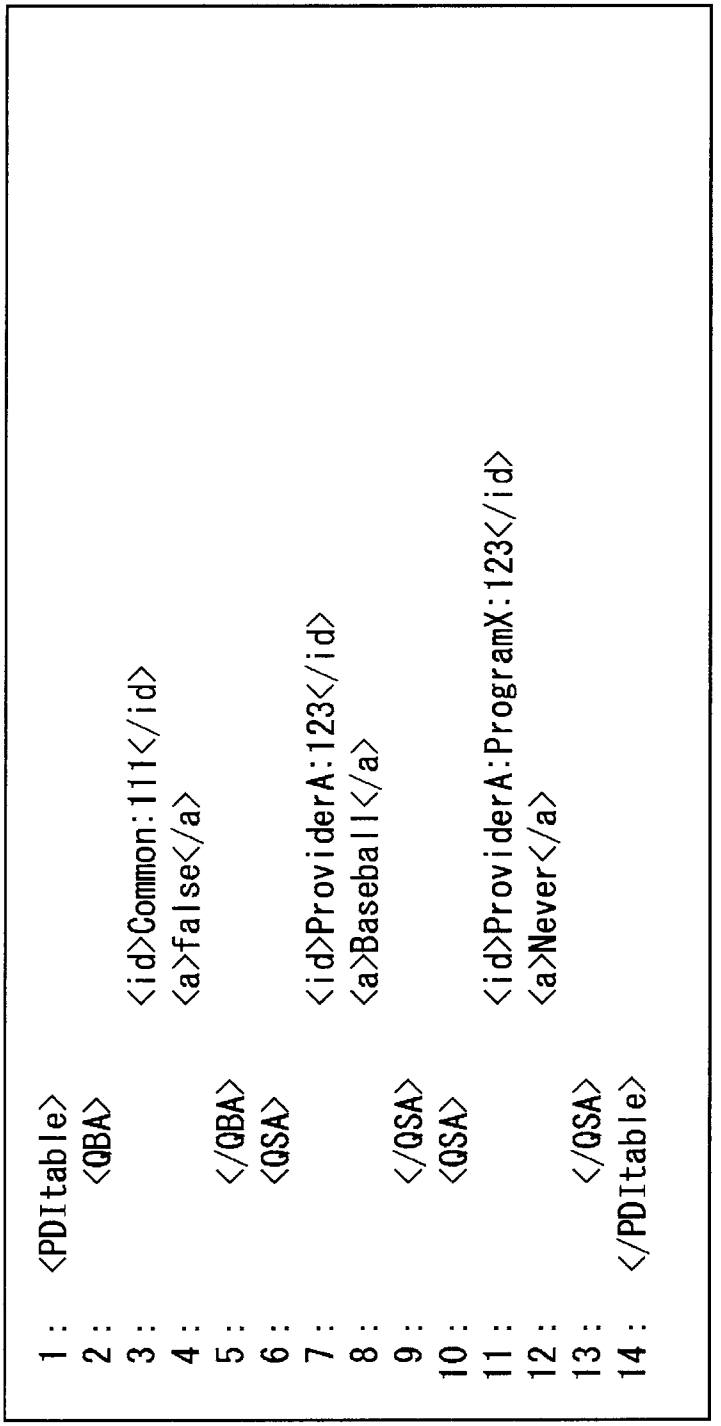
1 : <PDItable>
2 : <QBA>
3 : <id>Common:111</id>
4 : <a>false
5 : </QBA>
6 : <QSA>
7 : <id>ProviderA:123</id>
8 : <a>Baseball
9 : </QSA>
10 : <QSA>
11 : <id>ProviderA:ProgramX:123</id>
12 : <a>Never
13 : </QSA>
14 : </PDItable>

FIG. 15

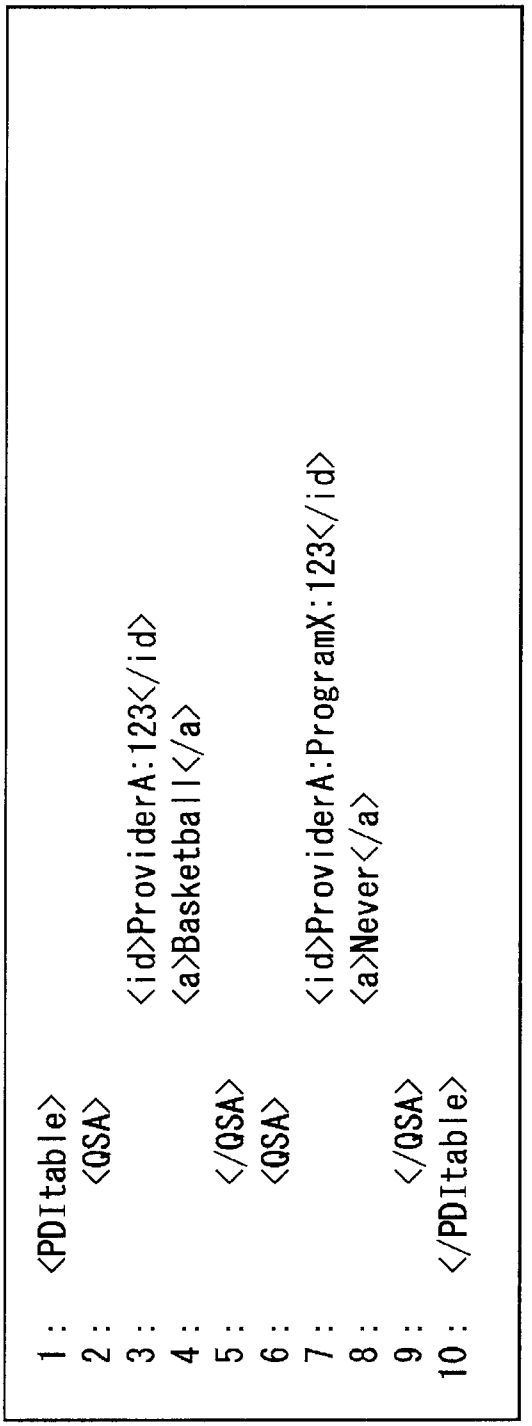
1 : <PDItable>
2 : <QSA>
3 : <id>ProviderA:123</id>
4 : <a>Basketball
5 : </QSA>
6 : <QSA>
7 : <id>ProviderA:ProgramX:123</id>
8 : <a>Never
9 : </QSA>
10 : </PDItable>

FIG. 16

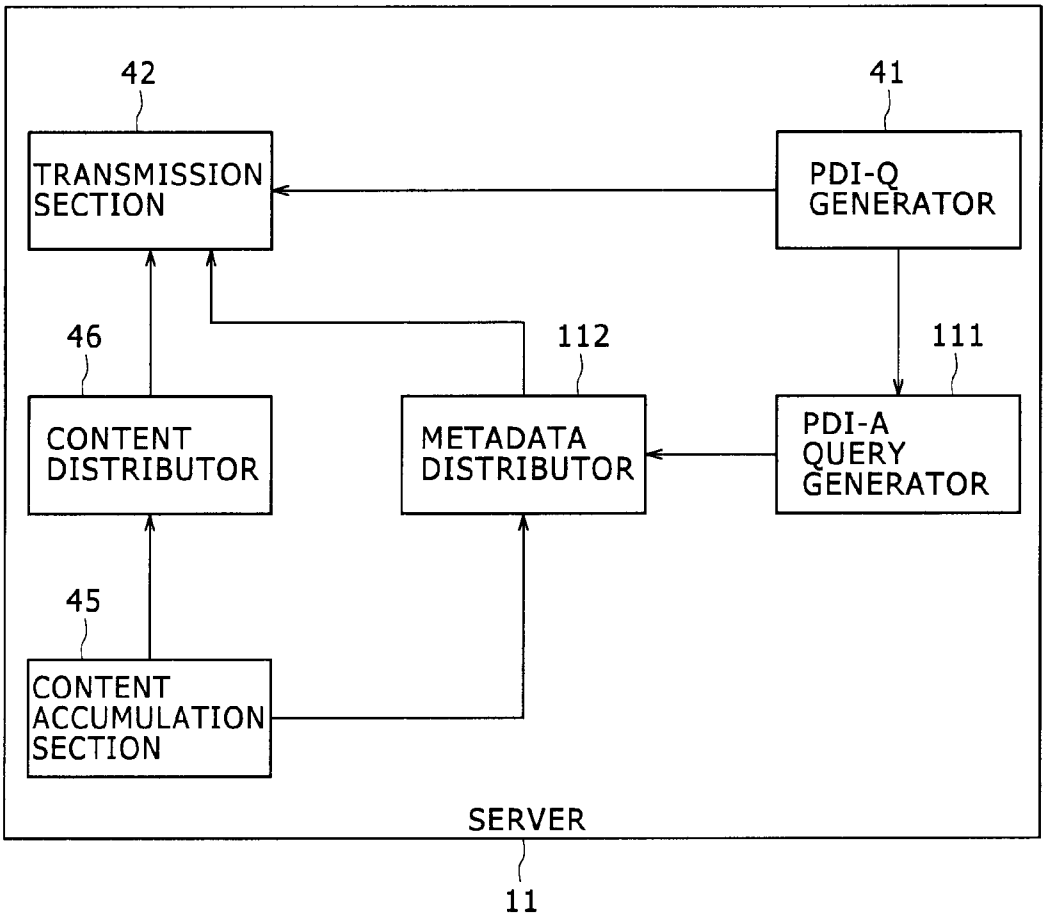
42
41
TRANSMISSION SECTION
PDI-Q GENERATOR
46
112
111
CONTENT DISTRIBUTOR
METADATA DISTRIBUTOR
PDI-A QUERY GENERATOR
45
CONTENT ACCUMULATION SECTION
SERVER
11

FIG. 17

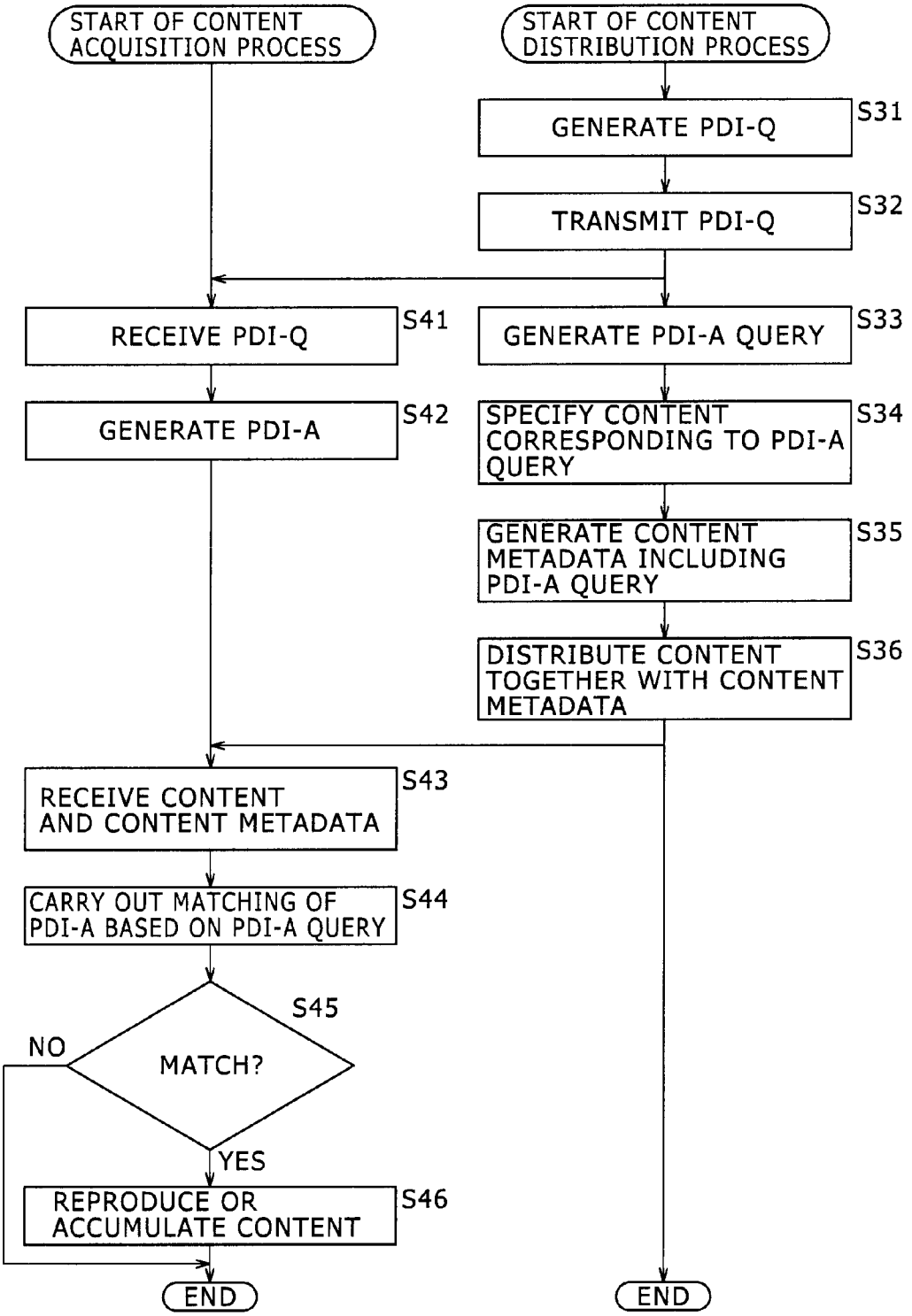
START OF CONTENT ACQUISITION PROCESS
START OF CONTENT DISTRIBUTION PROCESS
GENERATE PDI-Q
S31
TRANSMIT PDI-Q
S32
RECEIVE PDI-Q
S41
GENERATE PDI-A QUERY
S33
GENERATE PDI-A
S42
SPECIFY CONTENT CORRESPONDING TO PDI-A QUERY
S34
GENERATE CONTENT METADATA INCLUDING PDI-A QUERY
S35
DISTRIBUTE CONTENT TOGETHER WITH CONTENT METADATA
S36
RECEIVE CONTENT AND CONTENT METADATA
S43
CARRY OUT MATCHING OF PDI-A BASED ON PDI-A QUERY
S44
S45
MATCH?
NO
YES
REPRODUCE OR ACCUMULATE CONTENT
S46
END
END

FIG. 18

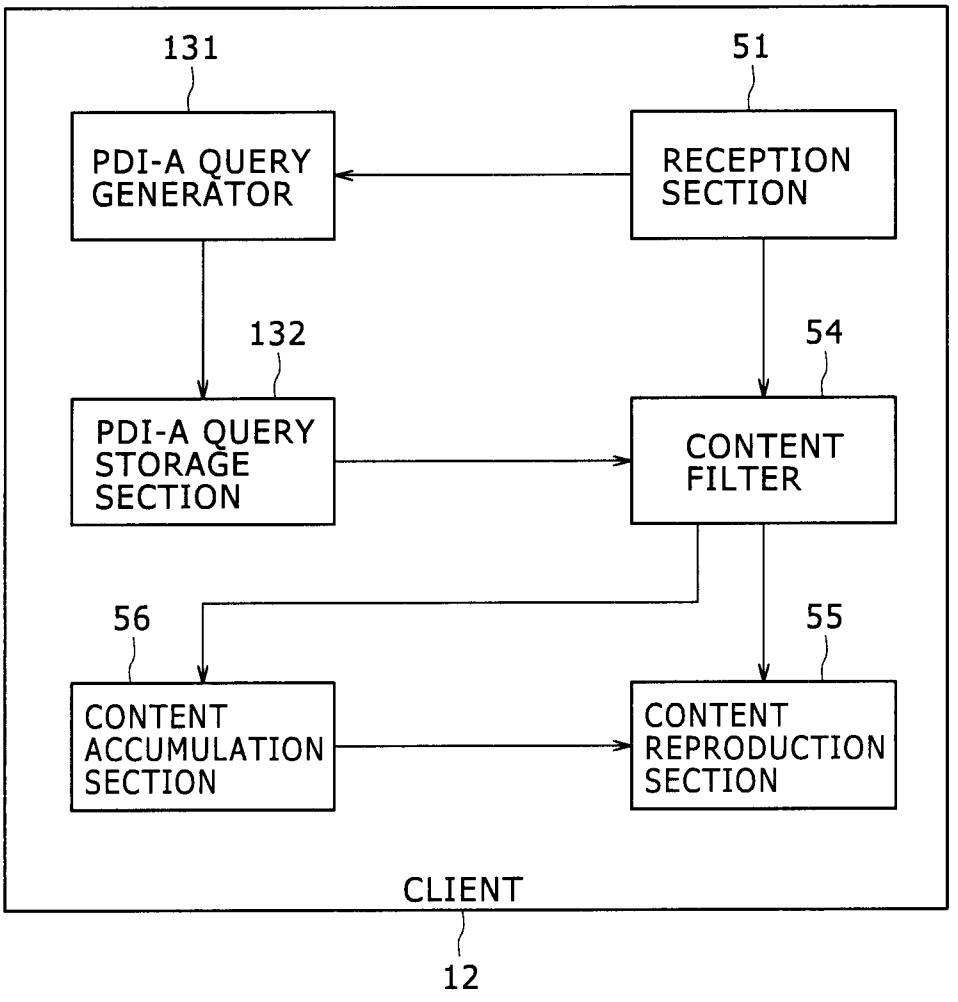
131
51
PDI-A QUERY GENERATOR
RECEPTION SECTION
132
54
PDI-A QUERY STORAGE SECTION
CONTENT FILTER
56
55
CONTENT ACCUMULATION SECTION
CONTENT REPRODUCTION SECTION
CLIENT
12

FIG. 19

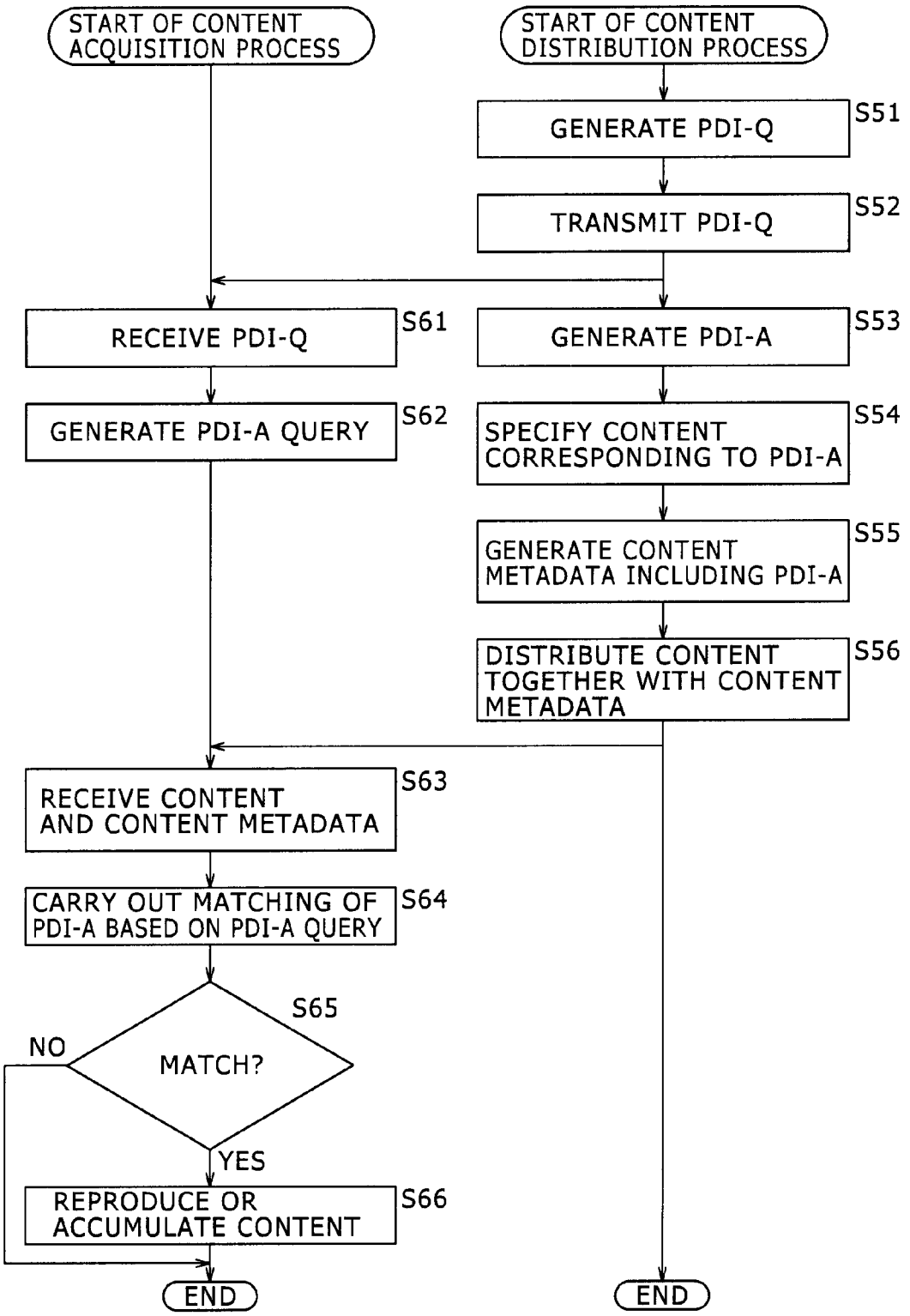
START OF CONTENT ACQUISITION PROCESS
START OF CONTENT DISTRIBUTION PROCESS
GENERATE PDI-Q
S51
TRANSMIT PDI-Q
S52
RECEIVE PDI-Q
S61
GENERATE PDI-A
S53
GENERATE PDI-A QUERY
S62
SPECIFY CONTENT CORRESPONDING TO PDI-A
S54
GENERATE CONTENT METADATA INCLUDING PDI-A
S55
DISTRIBUTE CONTENT TOGETHER WITH CONTENT METADATA
S56
RECEIVE CONTENT AND CONTENT METADATA
S63
CARRY OUT MATCHING OF PDI-A BASED ON PDI-A QUERY
S64
S65
MATCH?
NO
YES
REPRODUCE OR ACCUMULATE CONTENT
S66
END
END

FIG. 20

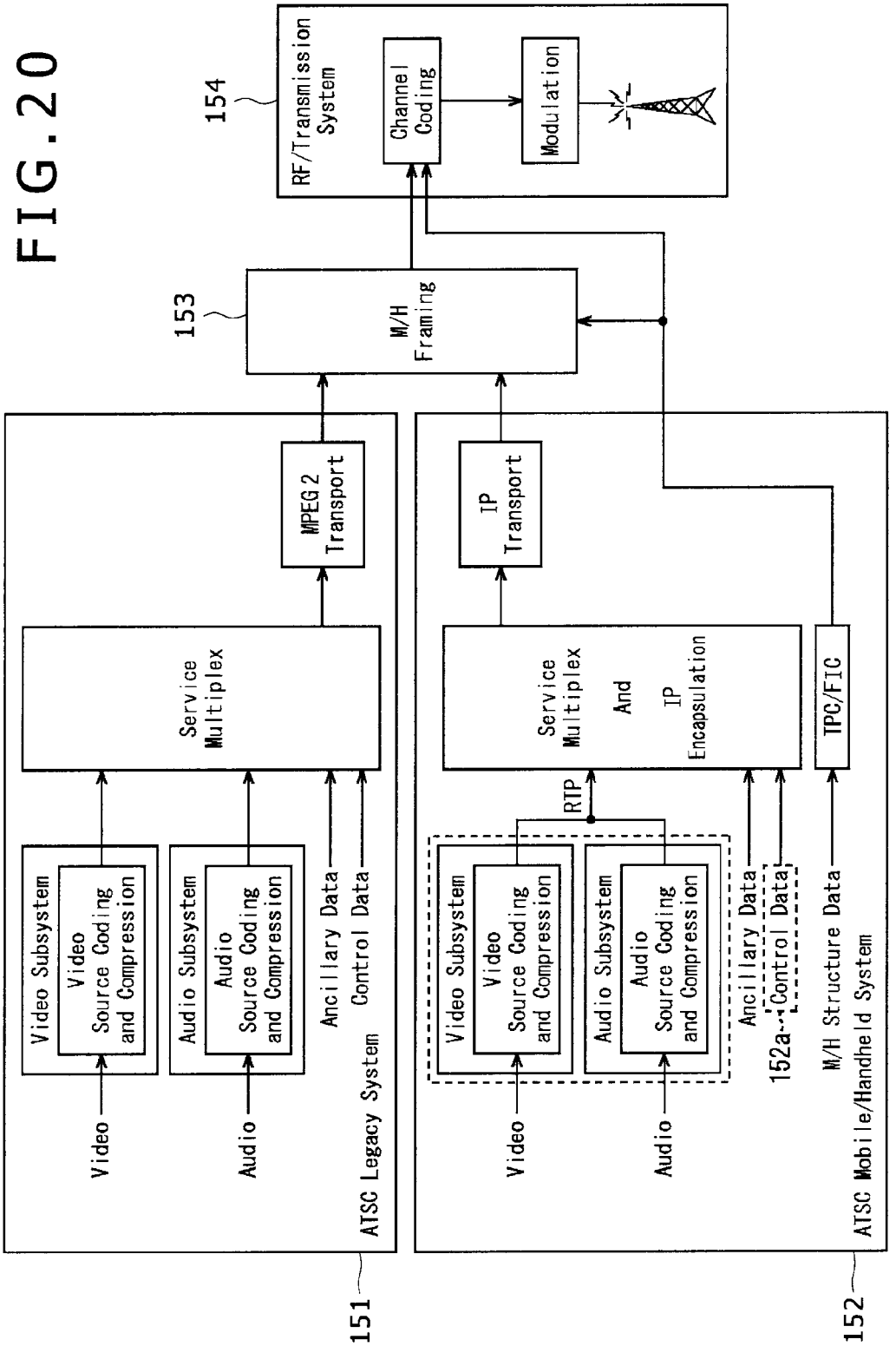
154
RF/Transmission System
Channel Coding
Modulation
153
M/H Framing
MPEG 2 Transport
IP Transport
Service Multiplex
Service Multiplex And IP Encapsulation
TPC/FIC
RTP
Video Subsystem
Video Source Coding and Compression
Audio Subsystem
Audio Source Coding and Compression
Video
Audio
Ancillary Data
Control Data
152a
M/H Structure Data
ATSC Legacy System
ATSC Mobile/Handheld System
151
152

FIG. 21

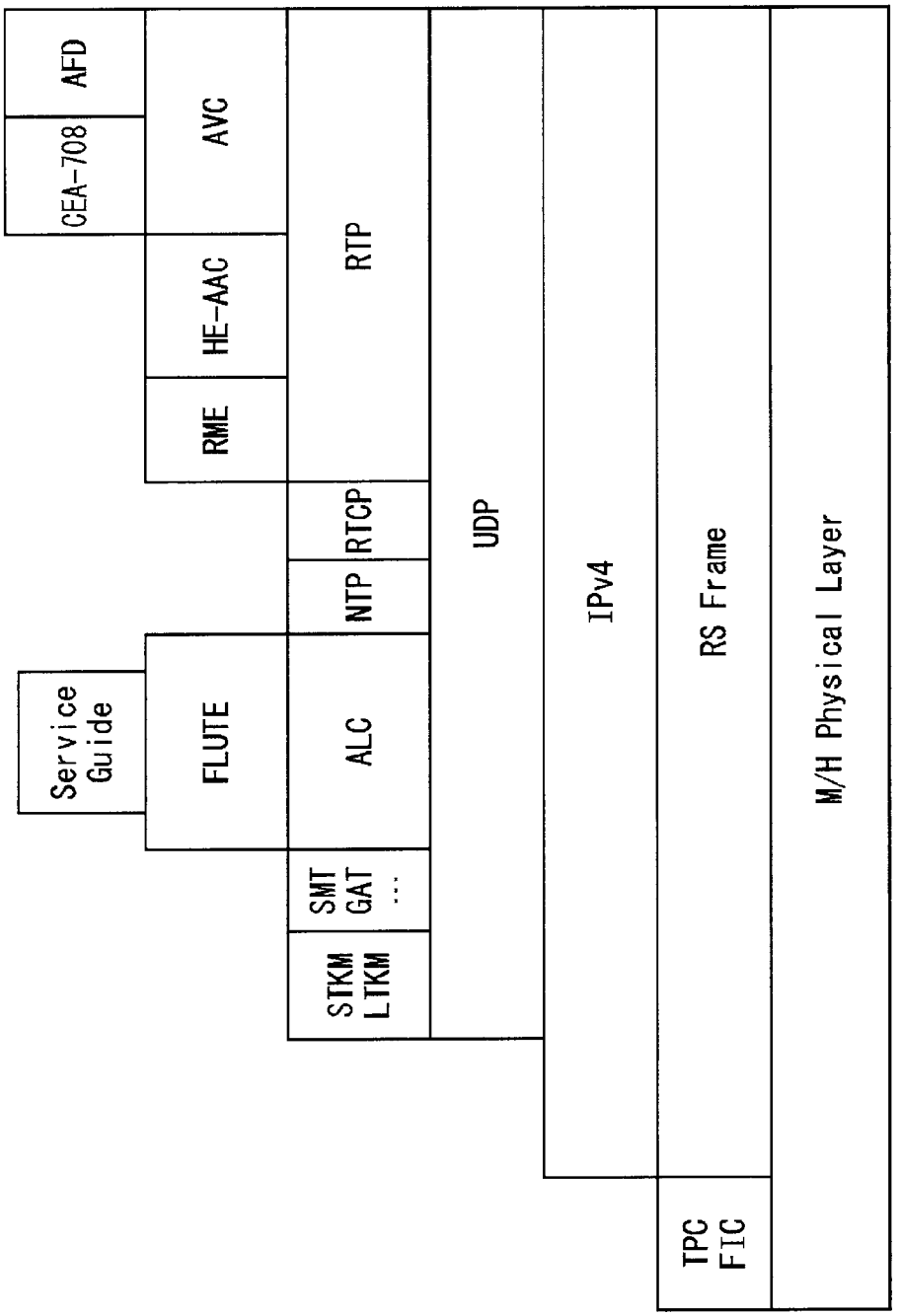
AFD
CEA-708
AVC
HE-AAC
RME
RTP
RTCP
NTP
UDP
IPv4
RS Frame
M/H Physical Layer
Service Guide
FLUTE
ALC
SMT
GAT
...
STKM
LTKM
TPC
FIC

FIG. 22

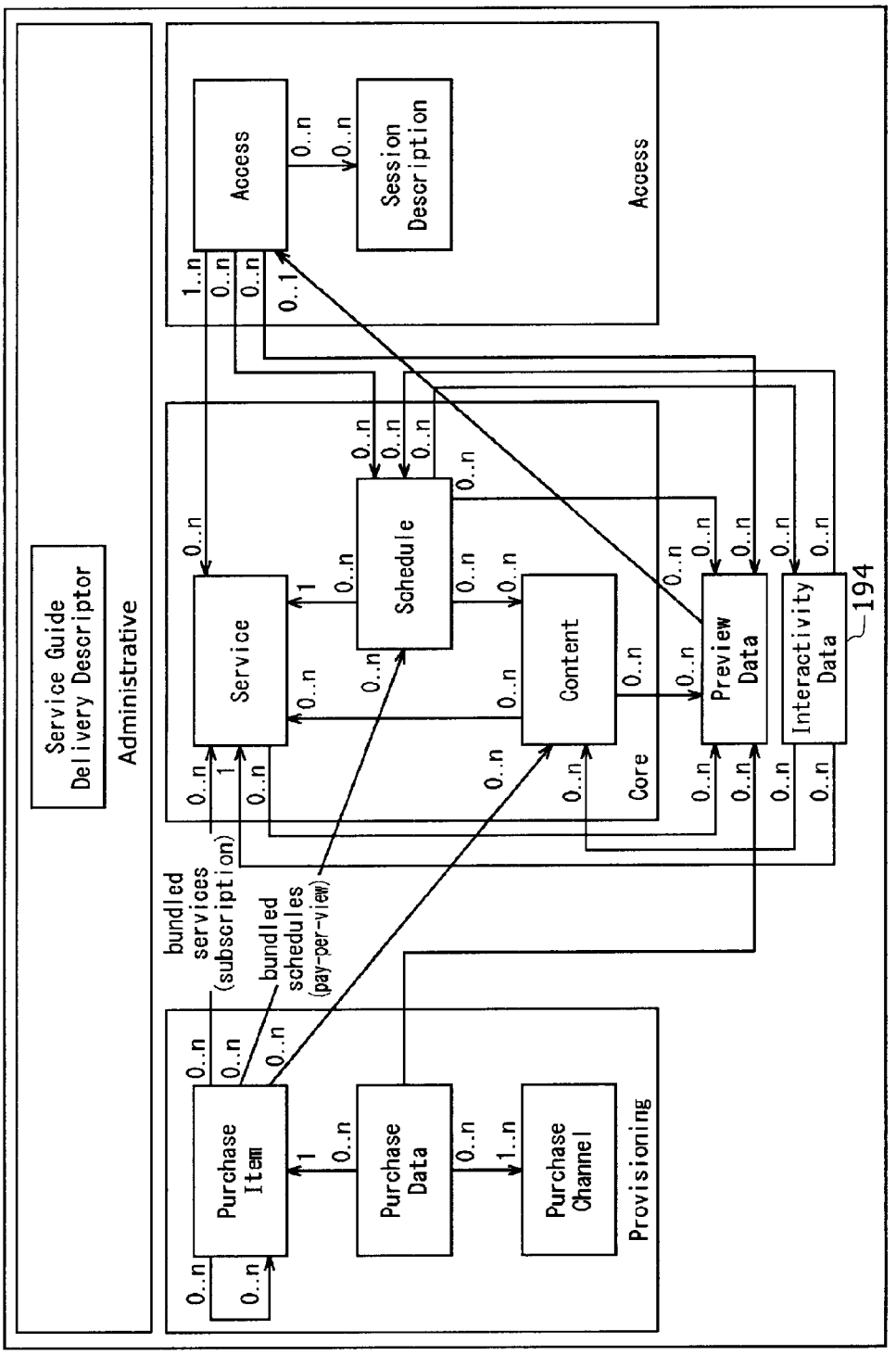
Service Guide Delivery Descriptor
Administrative
Access
Session Description
Schedule
Service
Content
Preview Data
Interactivity Data
194
Core
Purchase Item
Purchase Data
Purchase Channel
Provisioning
bundled services (subscription)
bundled schedules (pay-per-view)
1..n
0..n
0..1
1

FIG. 23

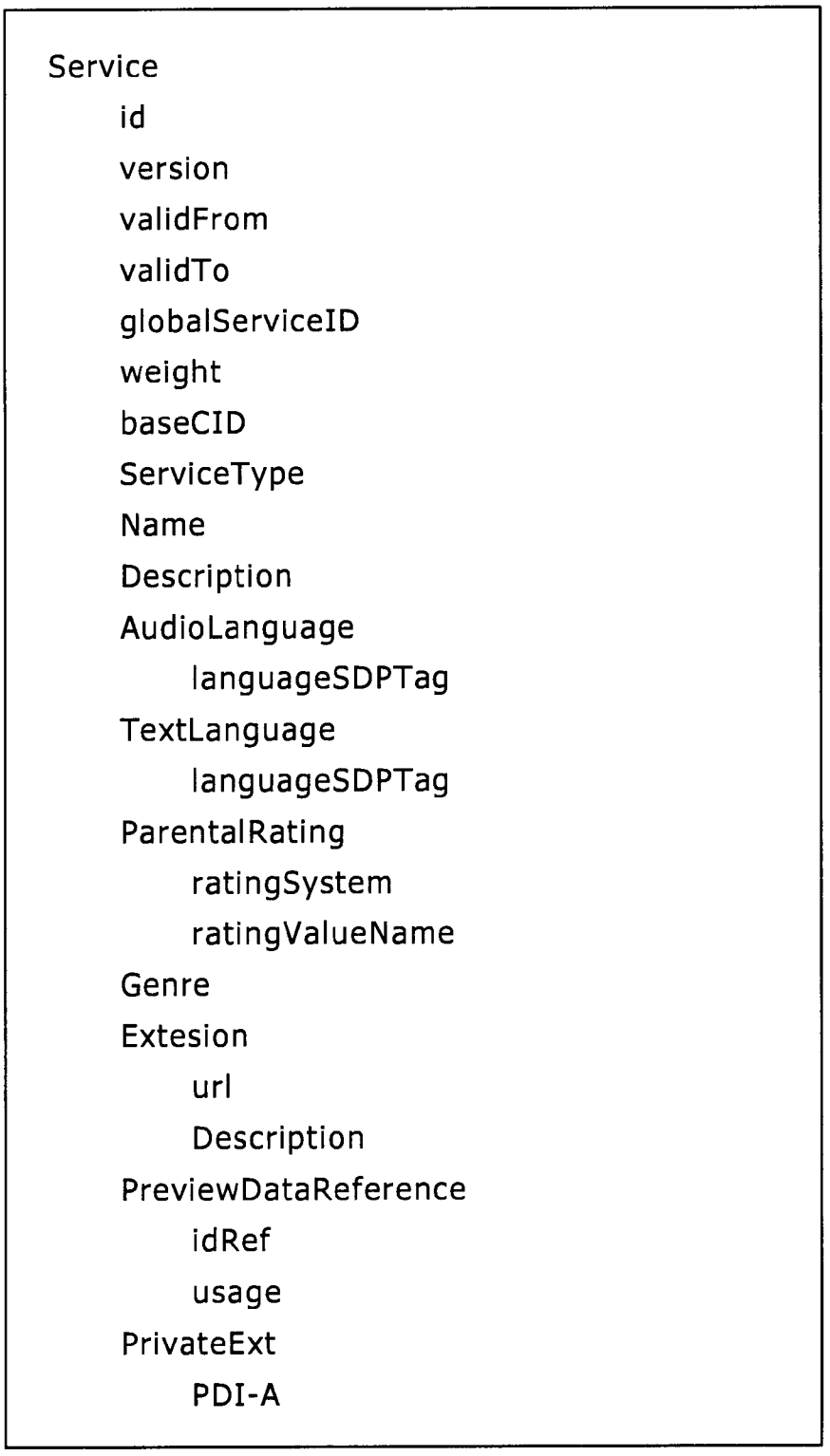
Service
id
version
validFrom
validTo
globalServiceID
weight
baseCID
ServiceType
Name
Description
AudioLanguage
languageSDPTag
TextLanguage
languageSDPTag
ParentalRating
ratingSystem
ratingValueName
Genre
Extesion
url
Description
PreviewDataReference
idRef
usage
PrivateExt
PDI-A

FIG. 24

Schedule
id
version
defaultSchedule
onDemand
validFrom
validTo
ServiceReference
idRef
ContentReference
idRef
contentLocation
PresentationWindow
startTime
endTime
PrivateExt
PDI-A

FIG. 25

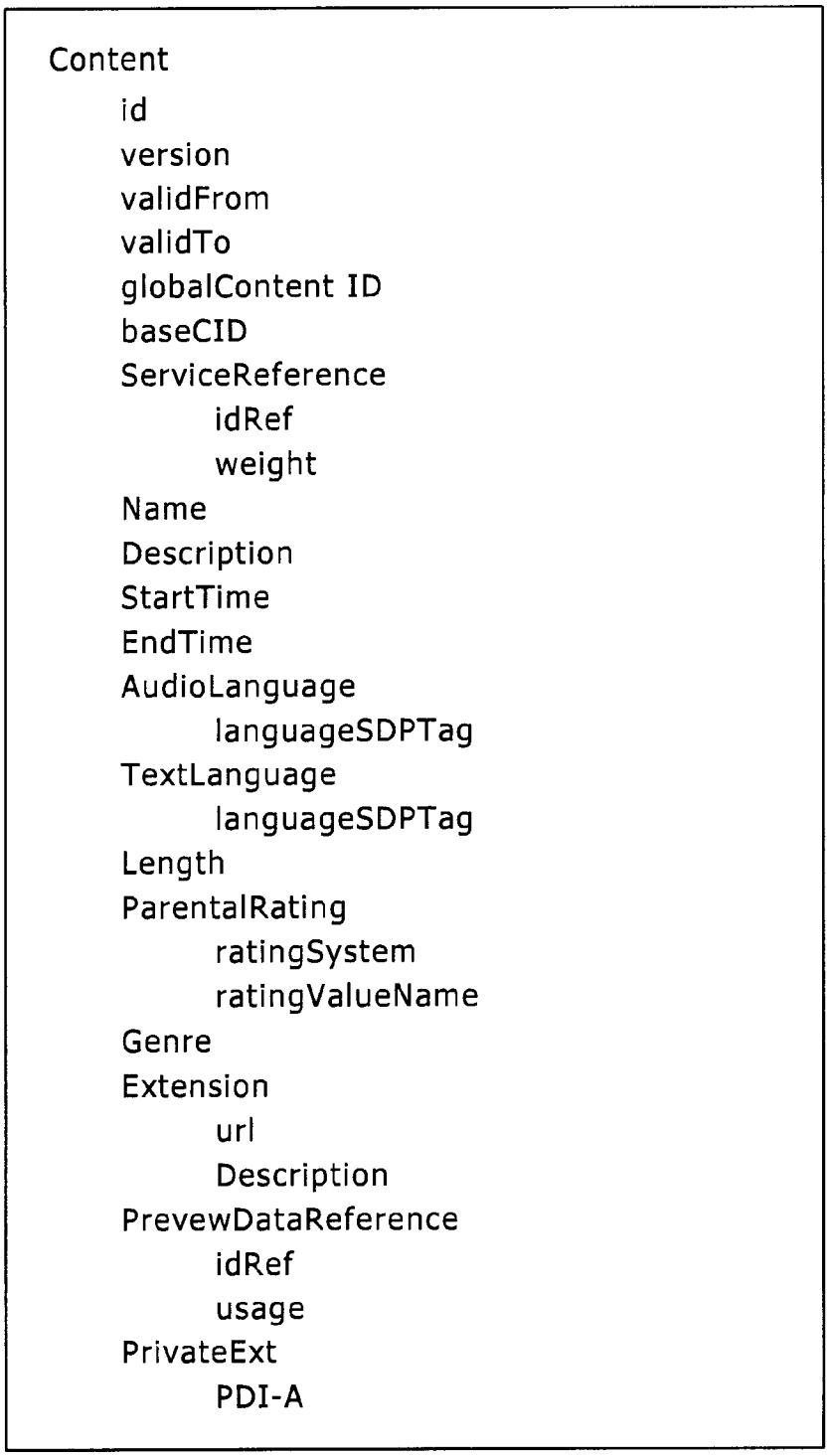
Content
id
version
validFrom
validTo
globalContent ID
baseCID
ServiceReference
idRef
weight
Name
Description
StartTime
EndTime
AudioLanguage
languageSDPTag
TextLanguage
languageSDPTag
Length
ParentalRating
ratingSystem
ratingValueName
Genre
Extension
url
Description
PrevewDataReference
idRef
usage
PrivateExt
PDI-A

FIG. 26

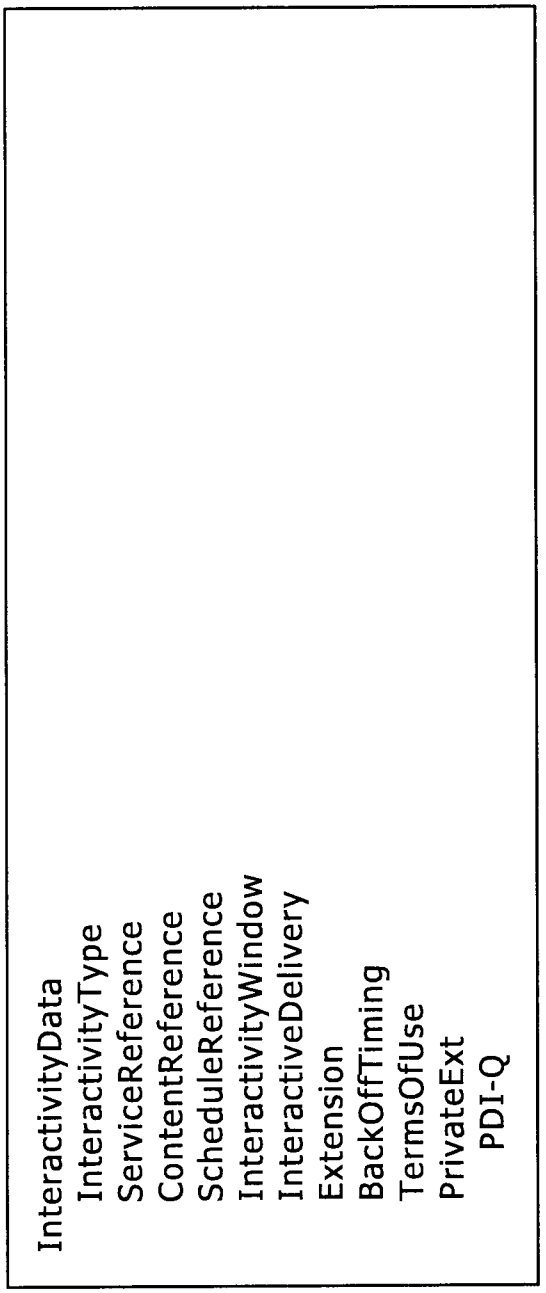
InteractivityData
InteractivityType
ServiceReference
ContentReference
ScheduleReference
InteractivityWindow
InteractiveDelivery
Extension
BackOffTiming
TermsOfUse
PrivateExt
PDI-Q

FIG. 27

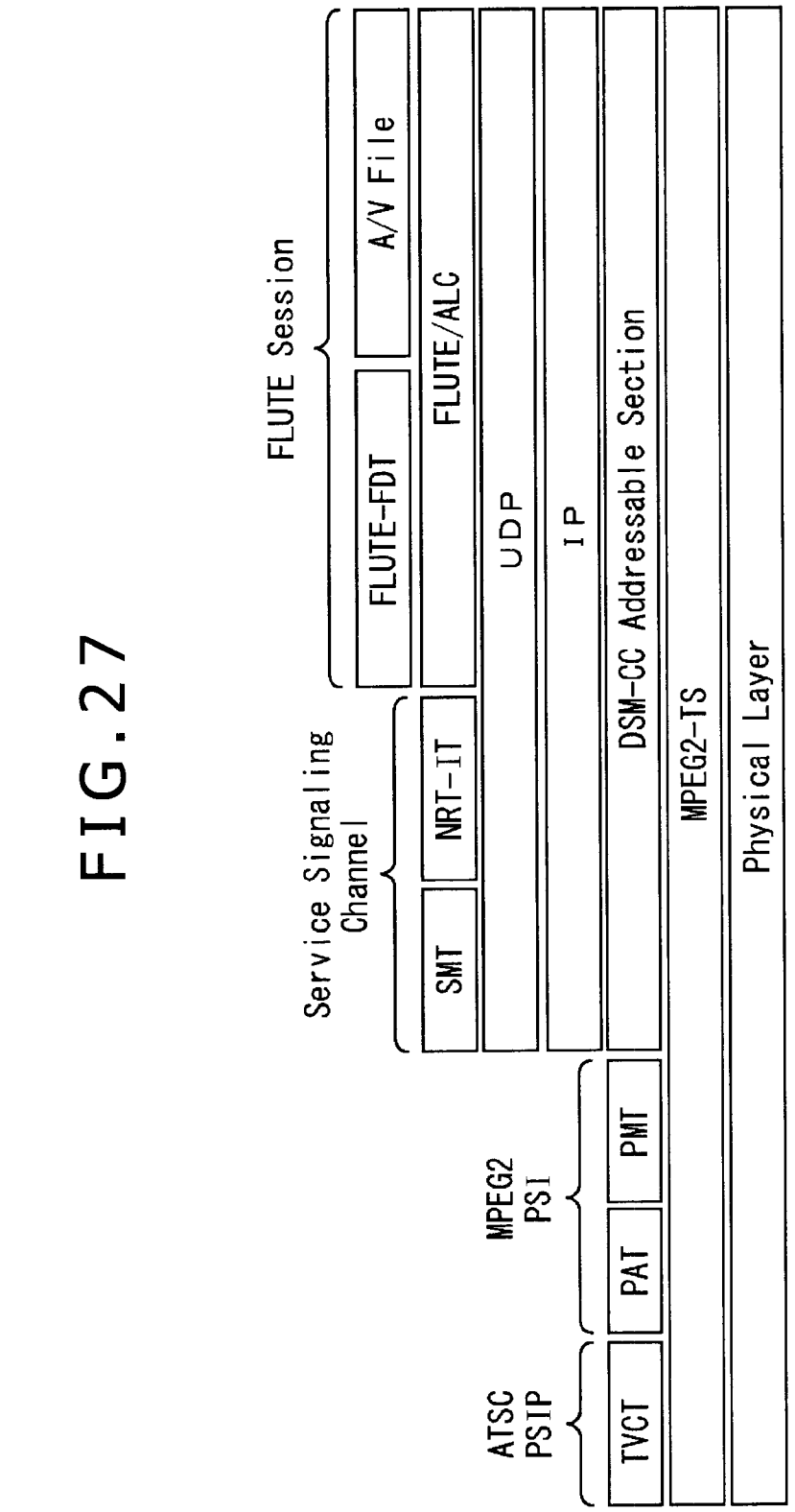
FLUTE Session
Service Signaling Channel
ATSC PSIP
MPEG2 PSI
FLUTE-FDT
A/V File
SMT
NRT-IT
FLUTE/ALC
UDP
IP
DSM-CC Addressable Section
TVCT
PAT
PMT
MPEG2-TS
Physical Layer

FIG.28

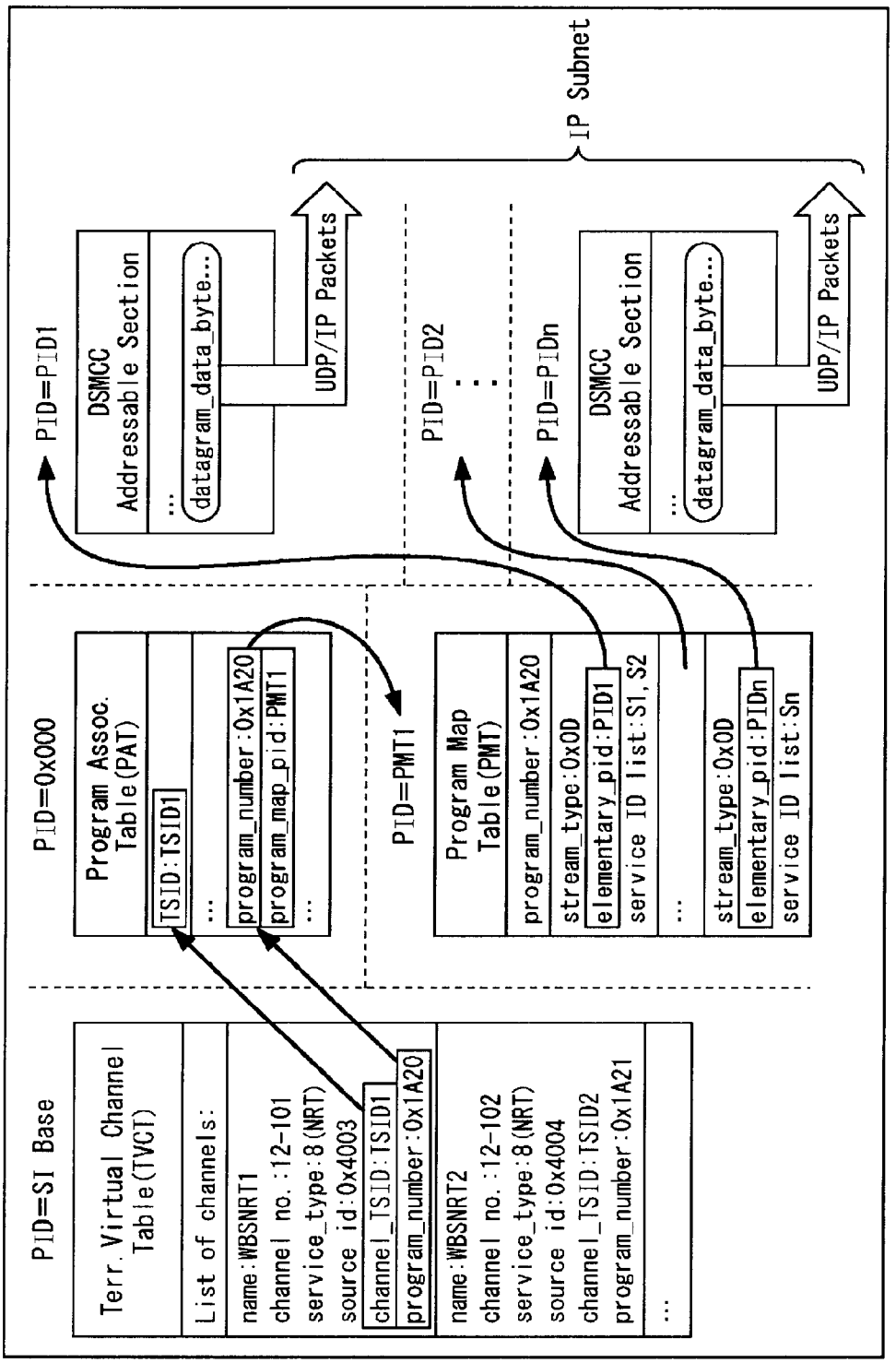
PID=SI Base
Terr. Virtual Channel Table(TVCT)
List of channels:
name:WBSNRT1
channel no.:12-101
service_type:8(NRT)
source id:0x4003
channel_TSID:TSID1
program_number:0x1A20
name:WBSNRT2
channel no.:12-102
service_type:8(NRT)
source id:0x4004
channel_TSID:TSID2
program_number:0x1A21
...
PID=0x000
Program Assoc. Table(PAT)
TSID:TSID1
...
program_number:0x1A20
program_map_pid:PMT1
...
PID=PMT1
Program Map Table(PMT)
program_number:0x1A20
stream_type:0x0D
elementary_pid:PID1
service ID list:S1, S2
...
stream_type:0x0D
elementary_pid:PIDn
service ID list:Sn
PID=PID1
DSMCC Addressable Section
...
datagram_data_byte...
UDP/IP Packets
PID=PID2
PID=PIDn
DSMCC Addressable Section
...
datagram_data_byte...
UDP/IP Packets
IP Subnet

FIG. 29

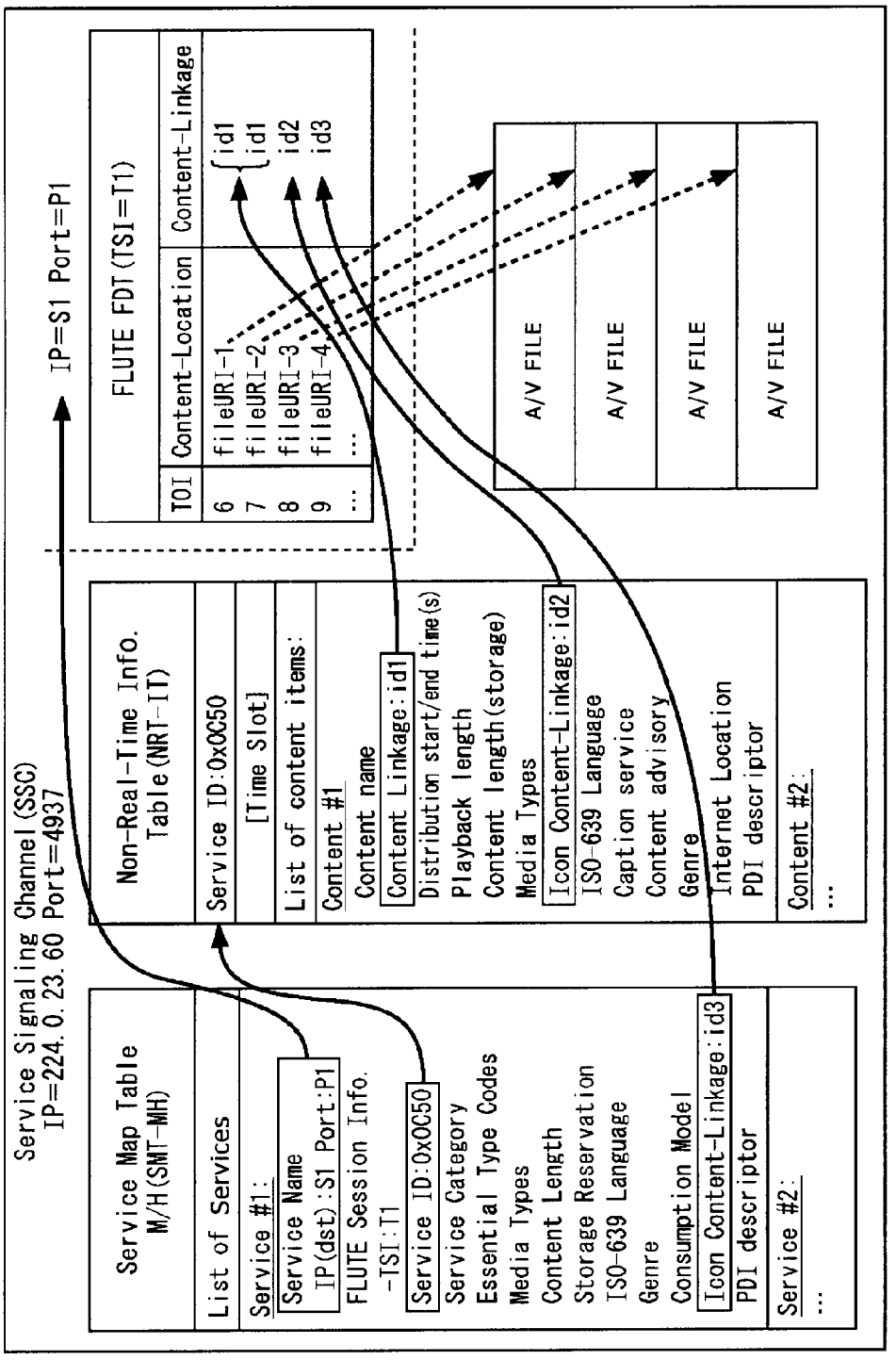
Service Signaling Channel (SSC)
IP=224.0.23.60 Port=4937
IP=S1 Port=P1
Service Map Table
M/H(SMT-MH)
List of Services
Service #1:
Service Name
IP(dst):S1 Port:P1
FLUTE Session Info.
-TSI:T1
Service ID:0x0C50
Service Category
Essential Type Codes
Media Types
Content Length
Storage Reservation
ISO-639 Language
Genre
Consumption Model
Icon Content-Linkage:id3
PDI descriptor
Service #2:
...
Non-Real-Time Info.
Table(NRT-IT)
Service ID:0x0C50
[Time Slot]
List of content items:
Content #1
Content name
Content Linkage:id1
Distribution start/end time(s)
Playback length
Content length(storage)
Media Types
Icon Content-Linkage:id2
ISO-639 Language
Caption service
Content advisory
Genre
Internet Location
PDI descriptor
Content #2:
...
FLUTE FDT(TSI=T1)
TOI
Content-Location
Content-Linkage
6 fileURI-1 id1
7 fileURI-2 id1
8 fileURI-3 id2
9 fileURI-4 id3
... ...
A/V FILE
A/V FILE
A/V FILE
A/V FILE

FIG.30

Syntax	No. of bits	Format
PDI_descriptor() {		
descriptor_tag	8	0x(TBD)
descriptor_length	8	uimsbf
length	8	uimsbf
PDI_Q or PDI_A or PDI_A_Query	var	-
}		

FIG. 31

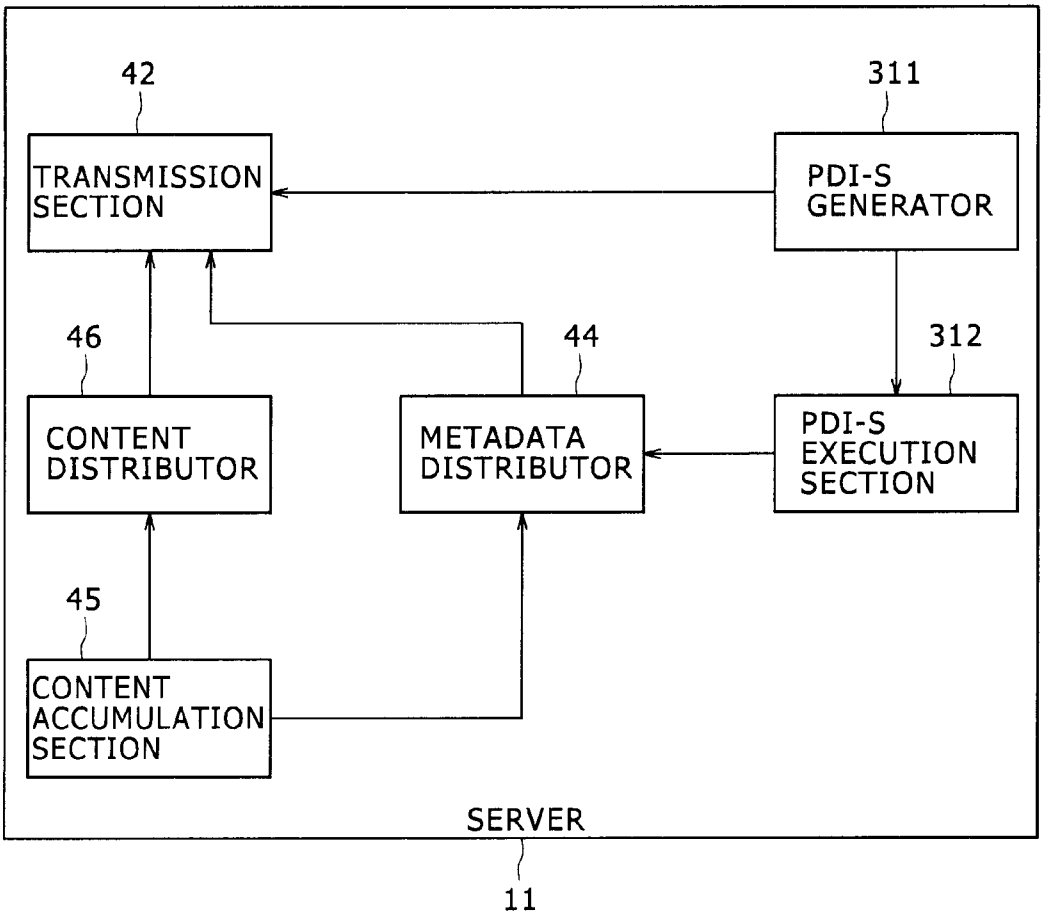
42
311
TRANSMISSION SECTION
PDI-S GENERATOR
46
44
312
CONTENT DISTRIBUTOR
METADATA DISTRIBUTOR
PDI-S EXECUTION SECTION
45
CONTENT ACCUMULATION SECTION
SERVER
11

FIG. 32

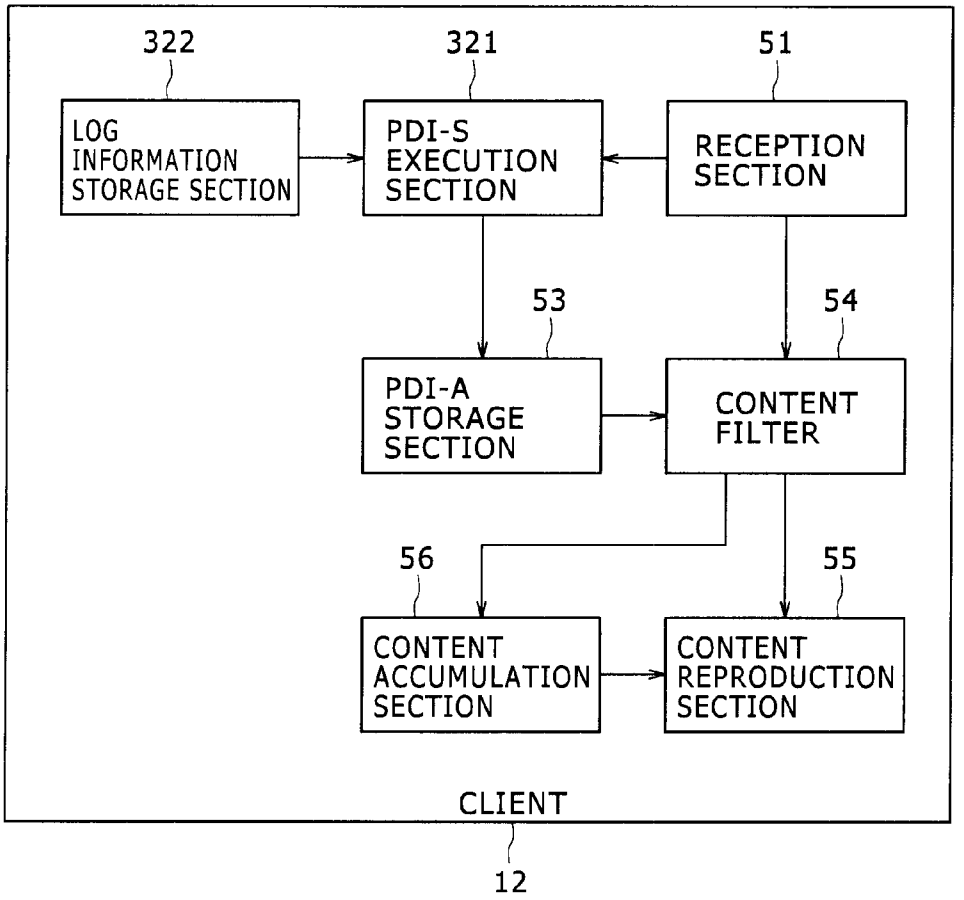
322
321
51
LOG INFORMATION STORAGE SECTION
PDI-S EXECUTION SECTION
RECEPTION SECTION
53
54
PDI-A STORAGE SECTION
CONTENT FILTER
56
55
CONTENT ACCUMULATION SECTION
CONTENT REPRODUCTION SECTION
CLIENT
12

FIG. 33

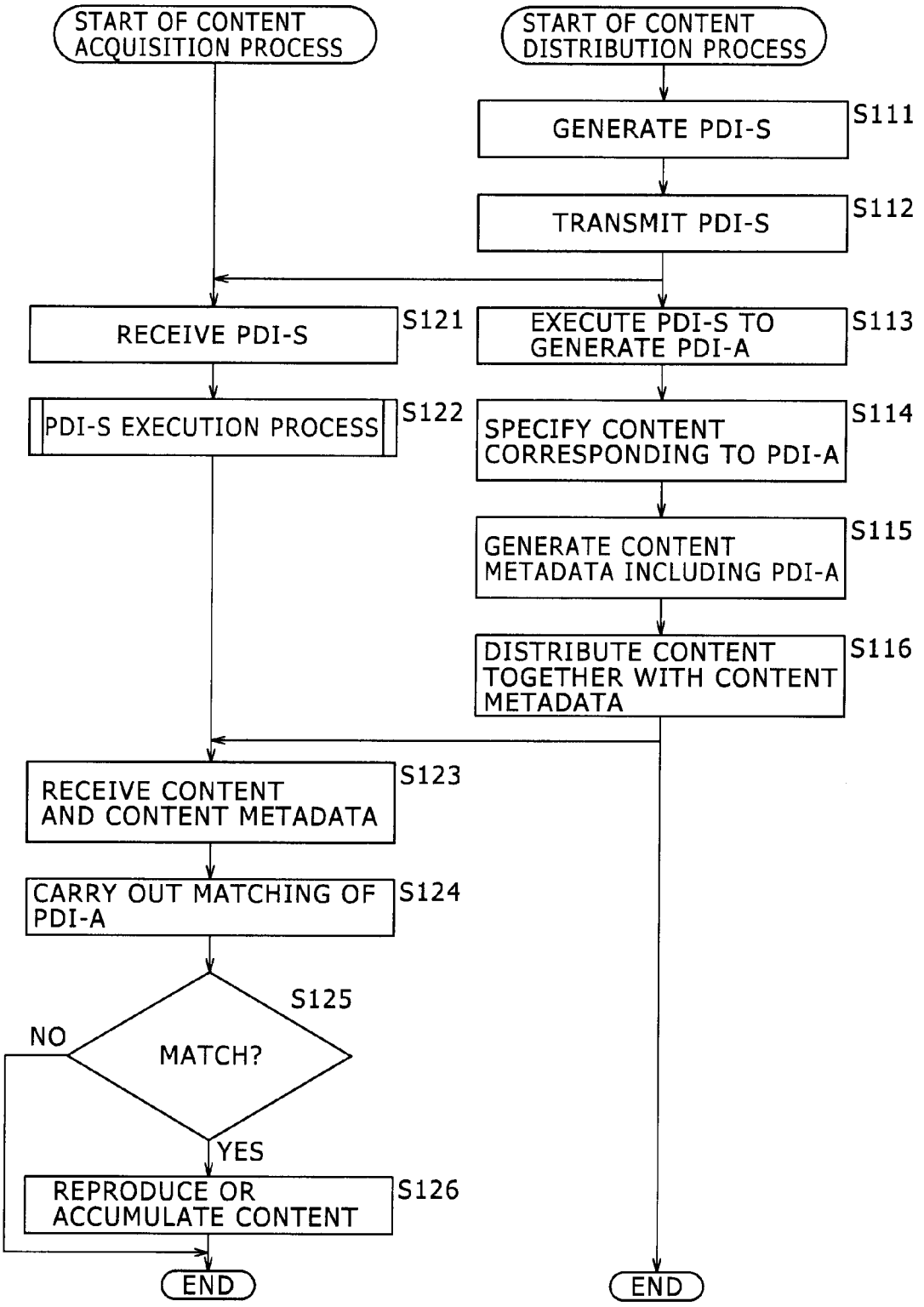
START OF CONTENT ACQUISITION PROCESS
START OF CONTENT DISTRIBUTION PROCESS
GENERATE PDI-S
S111
TRANSMIT PDI-S
S112
RECEIVE PDI-S
S121
EXECUTE PDI-S TO GENERATE PDI-A
S113
PDI-S EXECUTION PROCESS
S122
SPECIFY CONTENT CORRESPONDING TO PDI-A
S114
GENERATE CONTENT METADATA INCLUDING PDI-A
S115
DISTRIBUTE CONTENT TOGETHER WITH CONTENT METADATA
S116
RECEIVE CONTENT AND CONTENT METADATA
S123
CARRY OUT MATCHING OF PDI-A
S124
S125
MATCH?
NO
YES
REPRODUCE OR ACCUMULATE CONTENT
S126
END
END

FIG. 34 A

```
1 : <xs:schema xmlns:xs="http://www.w3.org/2001/XMLSchema" elementFormDefault="qualified"
    attributeFormDefault="unqualified")
2 :      <xs:element name="PDItable" type="PDItableType"/>
3:       <xs:complexType name="PDItableType">
4:                <xs:choice maxOccurs="unbounded">
5:                         <xs:element name="QIA" type="IntegerAnswerType"/>
6:                         <xs:element name="QBA" type="BooleanAnswerType"/>
7:                         <xs:element name="QSA" type="SelectionAnswerType"/>
8:                         <xs:element name="QTA" type="TextAnswerType"/>
9:                         <xs:element name="QAA" type="AnyAnswerType"/>
10:               </xs:choice>
11:               <xs:attribute name="transactional" type="xs:boolean" use="optional"/>
12:      </xs:complexType>
13:      <xs:complexType name="IntegerAnswerType">
14:               <xs:sequence>
15:                        <xs:element name="id" type="xs:anyURI"/>
16:                        <xs:element name="q" type="xs:string" minOccurs="0"/>
17:                        <xs:element name="a" type="xs:integer" minOccurs="0"/>
18:               </xs:sequence>
19:               <xs:attribute name="minInclusive" type="xs:integer" use="optional"/>
20:               <xs:attribute name="maxInclusive" type="xs:integer" use="optional"/>
21:      </xs:complexType>
22:      <xs:complexType name="BooleanAnswerType">
23:               <xs:sequence>
24:                        <xs:element name="id" type="xs:anyURI"/>
25:                        <xs:element name="q" type="xs:string" minOccurs="0"/>
26:                        <xs:element name="a" type="xs:boolean" minOccurs="0"/>
27:               </xs:sequence>
28:      </xs:complexType>
29:      <xs:complexType name=""SelectionAnswerType">
30:               <xs:sequence>
31:                        <xs:element name="id" type="xs:anyURI"/>
32:                        <xs:element name="q" type="xs:string" minOccurs="0"/>
33:                        <xs:element name="a" type="xs:string" minOccurs="0"
    maxOccurs="unbounded"/>
```

FIG. 34 B

```
34:                    </xs:sequence>
35:                    <xs:attribute name="minChoice" type="xs:integer" use="optional"/>
36:                    <xs:attribute name="maxChoice" type="xs:integer" use="optional"/>
37:       </xs:complexType>
38:       <xs:complexType name="TextAnswerType">
39:                     <xs:sequence>
40:                              <xs:element name="id" type="xs:anyURI"/>
41:                              <xs:element name="q" type="xs:string" minOccurs="0"/>
42:                              <xs:element name="a" type="xs:string" minOccurs="0"/>
43:                     </xs:sequence>
44:       </xs:complexType>
45:       <xs:complexType name="AnyAnswerType")
46:                    <xs:sequence>
47:                              <xs:element name="id" type="xs:anyURI"/>
48:                              <xs:element name="a" type="xs:base64Binary"/>
49:                    </xs:sequence>
50:       </xs:complex Type>
51: </xs:schema>
```

FIG. 35

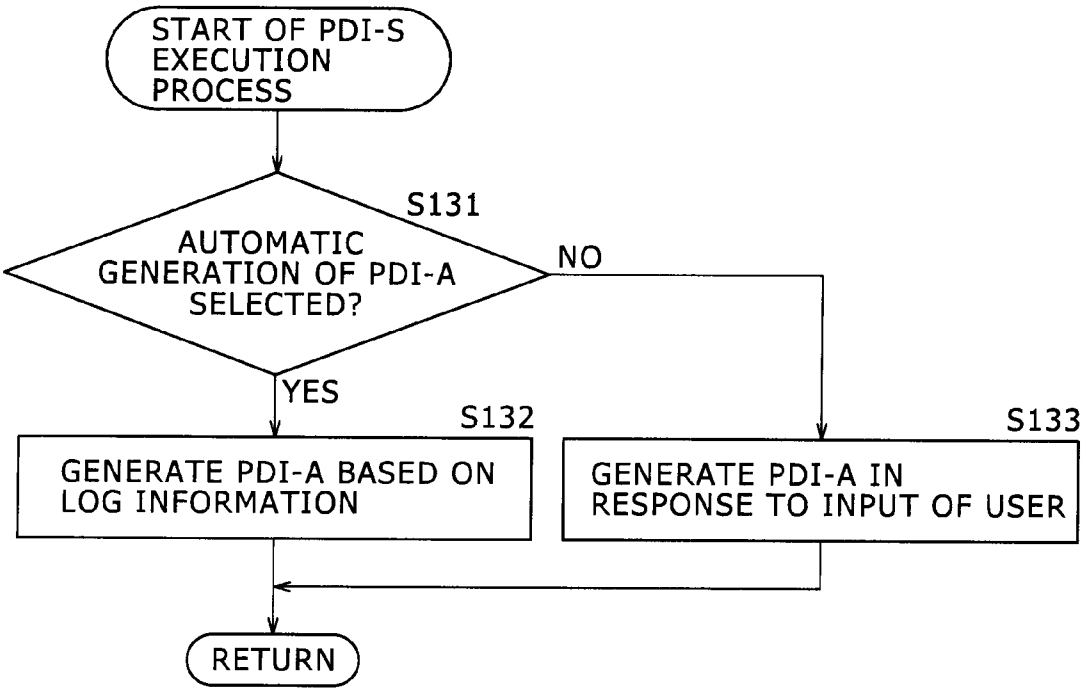
START OF PDI-S EXECUTION PROCESS
S131
AUTOMATIC GENERATION OF PDI-A SELECTED?
NO
YES
S132
GENERATE PDI-A BASED ON LOG INFORMATION
S133
GENERATE PDI-A IN RESPONSE TO INPUT OF USER
RETURN

FIG. 36

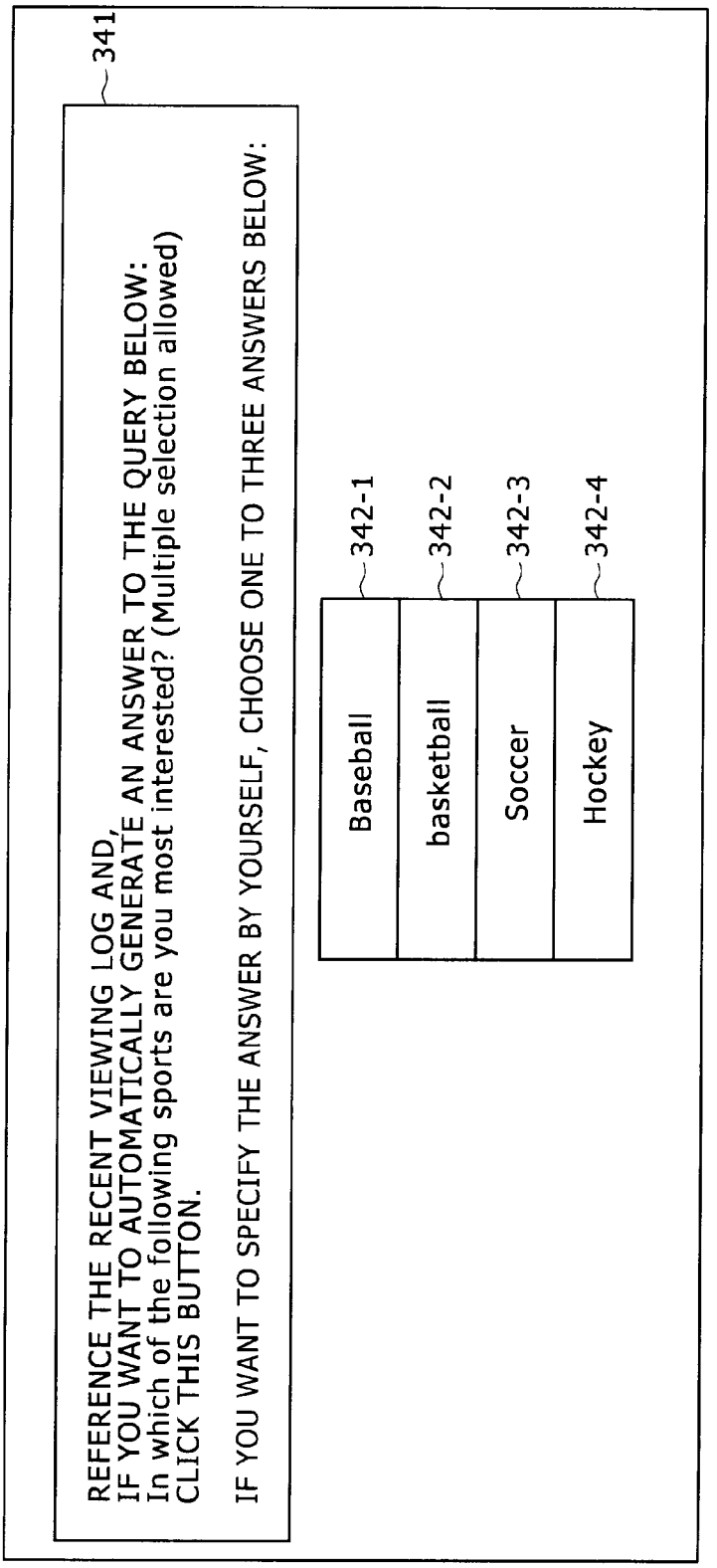
341
REFERENCE THE RECENT VIEWING LOG AND,
IF YOU WANT TO AUTOMATICALLY GENERATE AN ANSWER TO THE QUERY BELOW:
In which of the following sports are you most interested? (Multiple selection allowed)
CLICK THIS BUTTON.
IF YOU WANT TO SPECIFY THE ANSWER BY YOURSELF, CHOOSE ONE TO THREE ANSWERS BELOW:
342-1
Baseball
342-2
basketball
342-3
Soccer
342-4
Hockey

FIG. 37

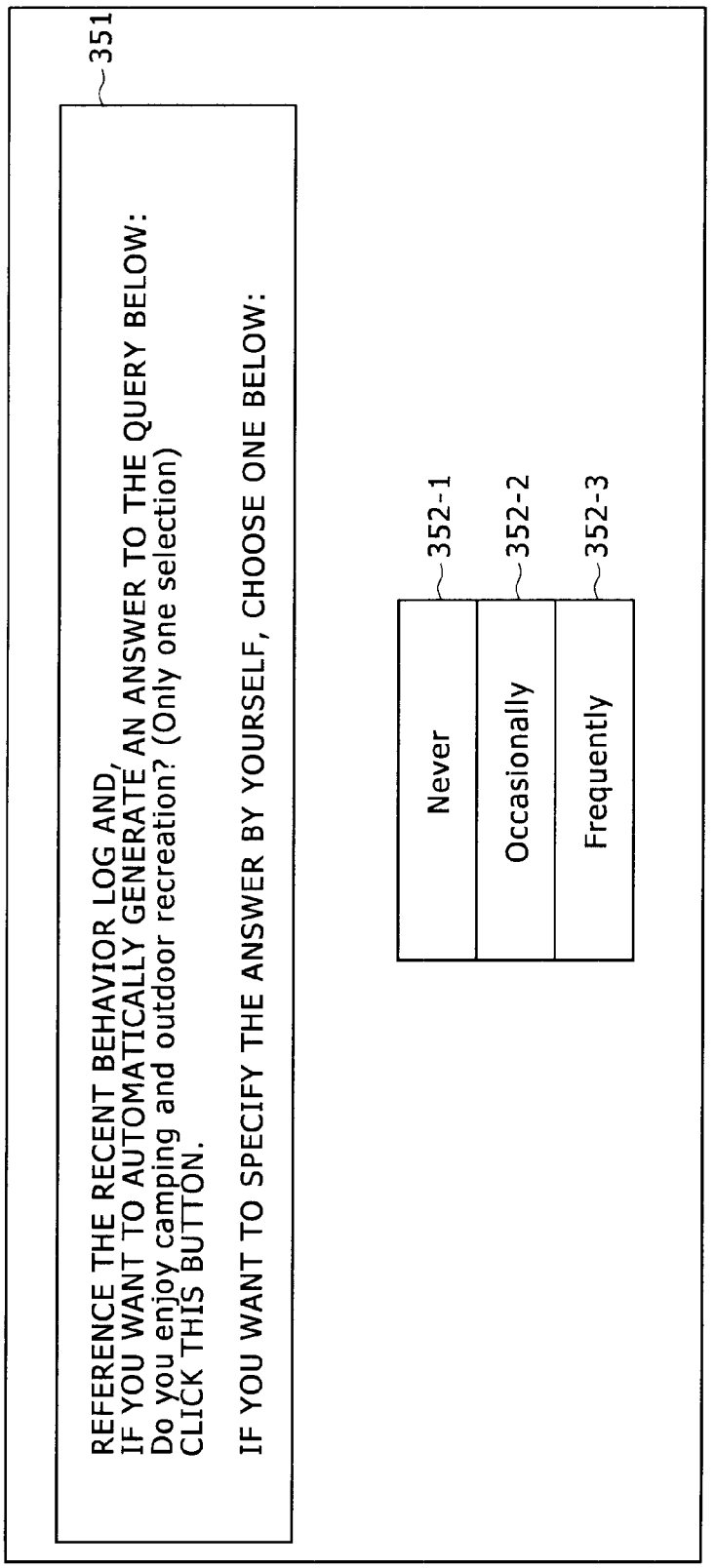
351
REFERENCE THE RECENT BEHAVIOR LOG AND,
IF YOU WANT TO AUTOMATICALLY GENERATE AN ANSWER TO THE QUERY BELOW:
Do you enjoy camping and outdoor recreation? (Only one selection)
CLICK THIS BUTTON.
IF YOU WANT TO SPECIFY THE ANSWER BY YOURSELF, CHOOSE ONE BELOW:
352-1
Never
352-2
Occasionally
352-3
Frequently

FIG. 38

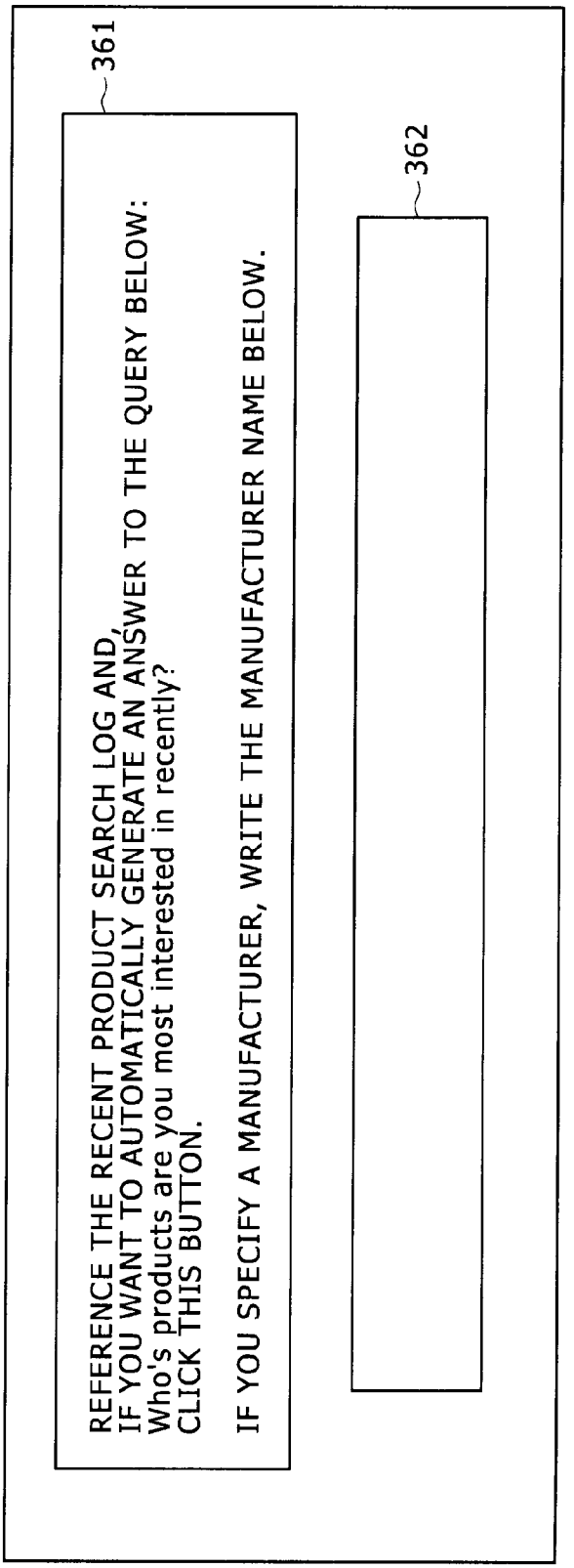
361
REFERENCE THE RECENT PRODUCT SEARCH LOG AND,
IF YOU WANT TO AUTOMATICALLY GENERATE AN ANSWER TO THE QUERY BELOW:
Who's products are you most interested in recently?
CLICK THIS BUTTON.
IF YOU SPECIFY A MANUFACTURER, WRITE THE MANUFACTURER NAME BELOW.
362

FIG. 39

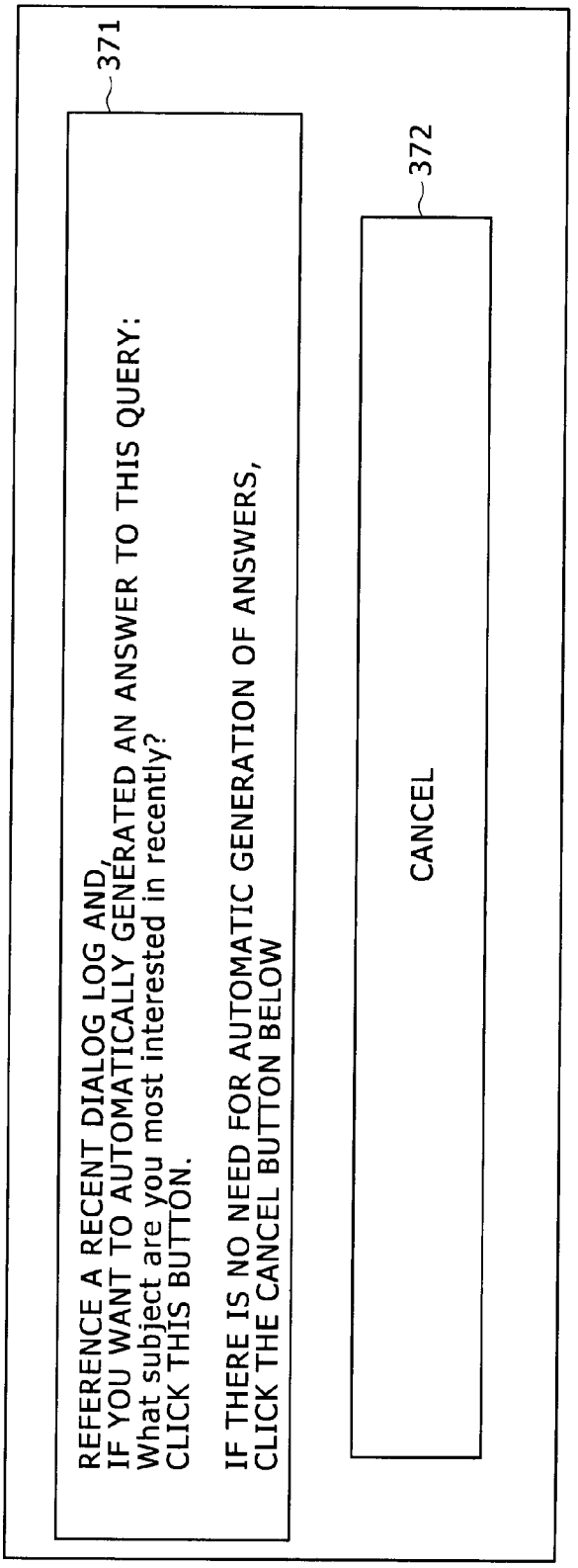
371
REFERENCE A RECENT DIALOG LOG AND,
IF YOU WANT TO AUTOMATICALLY GENERATED AN ANSWER TO THIS QUERY:
What subject are you most interested in recently?
CLICK THIS BUTTON.
IF THERE IS NO NEED FOR AUTOMATIC GENERATION OF ANSWERS,
CLICK THE CANCEL BUTTON BELOW
372
CANCEL

FIG.40

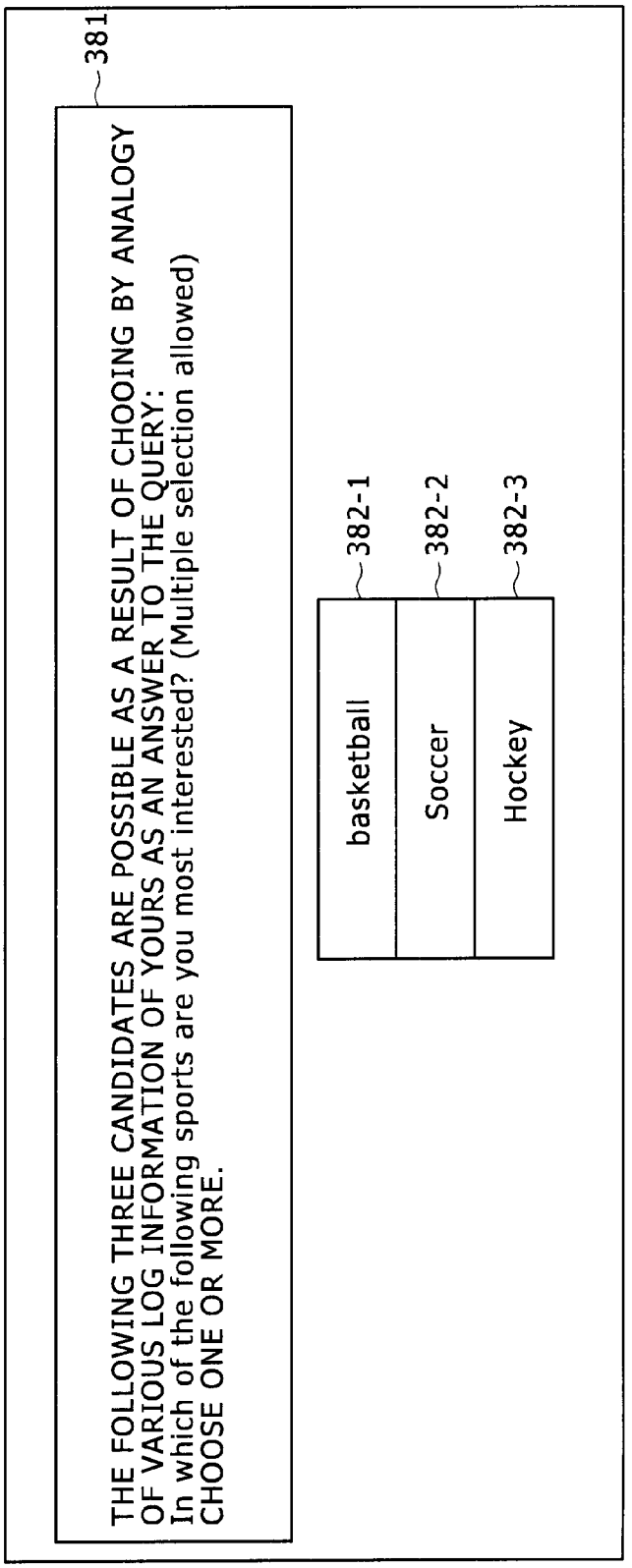
381
THE FOLLOWING THREE CANDIDATES ARE POSSIBLE AS A RESULT OF CHOOING BY ANALOGY OF VARIOUS LOG INFORMATION OF YOURS AS AN ANSWER TO THE QUERY:
In which of the following sports are you most interested? (Multiple selection allowed)
CHOOSE ONE OR MORE.
382-1
basketball
382-2
Soccer
382-3
Hockey

FIG.41

```
1 : <PDItable>
2 :     <QSA>
3 :         <id>ProviderA:123</id>
4 :         <a>Baseball</a>
5 :         <a>Soccer</a>
6 :         <a>Hockey</a>
7 :     </QSA>
8 :     <QSA>
9 :         <id>ProviderA:ProgramX:123</id>
10 :        <a>Occasionally</a>
11 :    </QSA>
12 :    <QTA>
13 :        <id>ProviderA:321</id>
14 :        <a>Somy</a>
15 :    </QTA>
16 :    <QAA>
17 :        <id>ProviderA:Special:999</id>
18 :        <a>jIKK3Q==</a>
19 :    </QAA>
20 : </PDItable>
```

FIG. 42

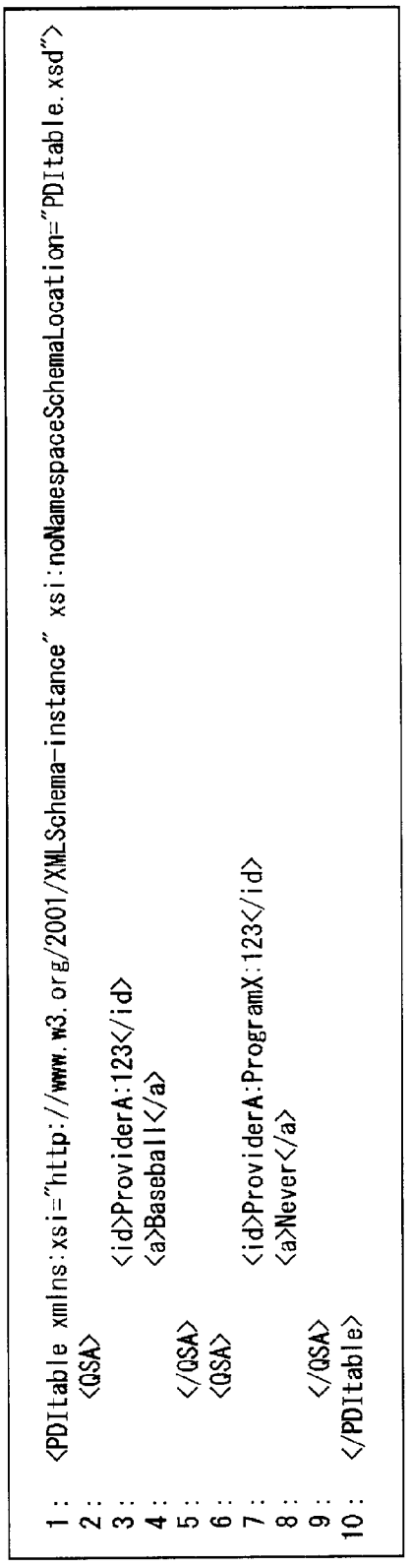

```
1 : <PDItable xmlns:xsi="http://www.w3.org/2001/XMLSchema-instance" xsi:noNamespaceSchemaLocation="PDItable.xsd">
2 :     <QSA>
3 :         <id>ProviderA:123</id>
4 :         <a>Baseball</a>
5 :     </QSA>
6 :     <QSA>
7 :         <id>ProviderA:ProgramX:123</id>
8 :         <a>Never</a>
9 :     </QSA>
10 : </PDItable>
```

FIG.43

```
1 : <PDItable xmlns:xsi="http://www.w3.org/2001/XMLSchema-instance" xsi:noNamespaceSchemaLocation="PDItable.xsd">
2 :     <QSA>
3 :         <id>ProviderA:123</id>
4 :         <a>Basketball</a>
5 :     </QSA>
6 :     <QSA>
7 :         <id>ProviderA:ProgramX:123</id>
8 :         <a>Never</a>
9 :     </QSA>
10 : </PDItable>
```

FIG. 44

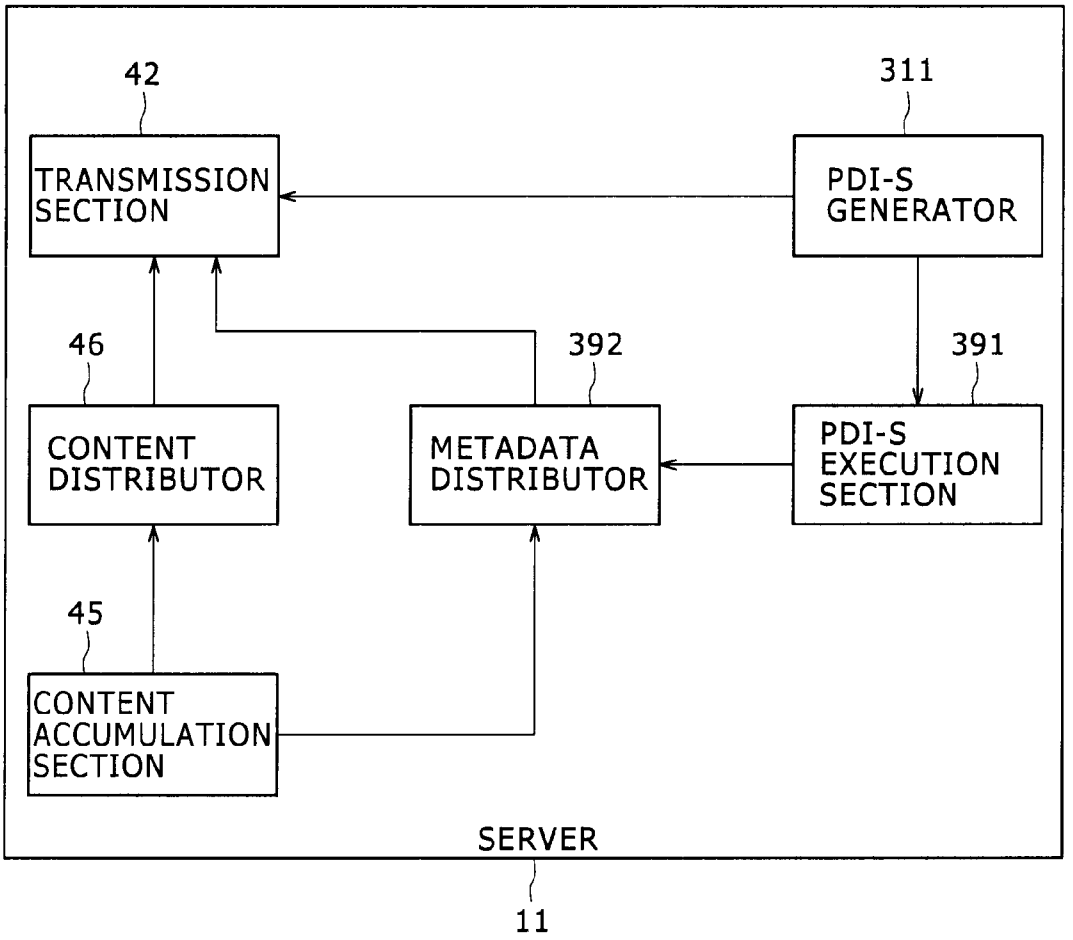
42
311
TRANSMISSION SECTION
PDI-S GENERATOR
46
392
391
CONTENT DISTRIBUTOR
METADATA DISTRIBUTOR
PDI-S EXECUTION SECTION
45
CONTENT ACCUMULATION SECTION
SERVER
11

FIG. 45

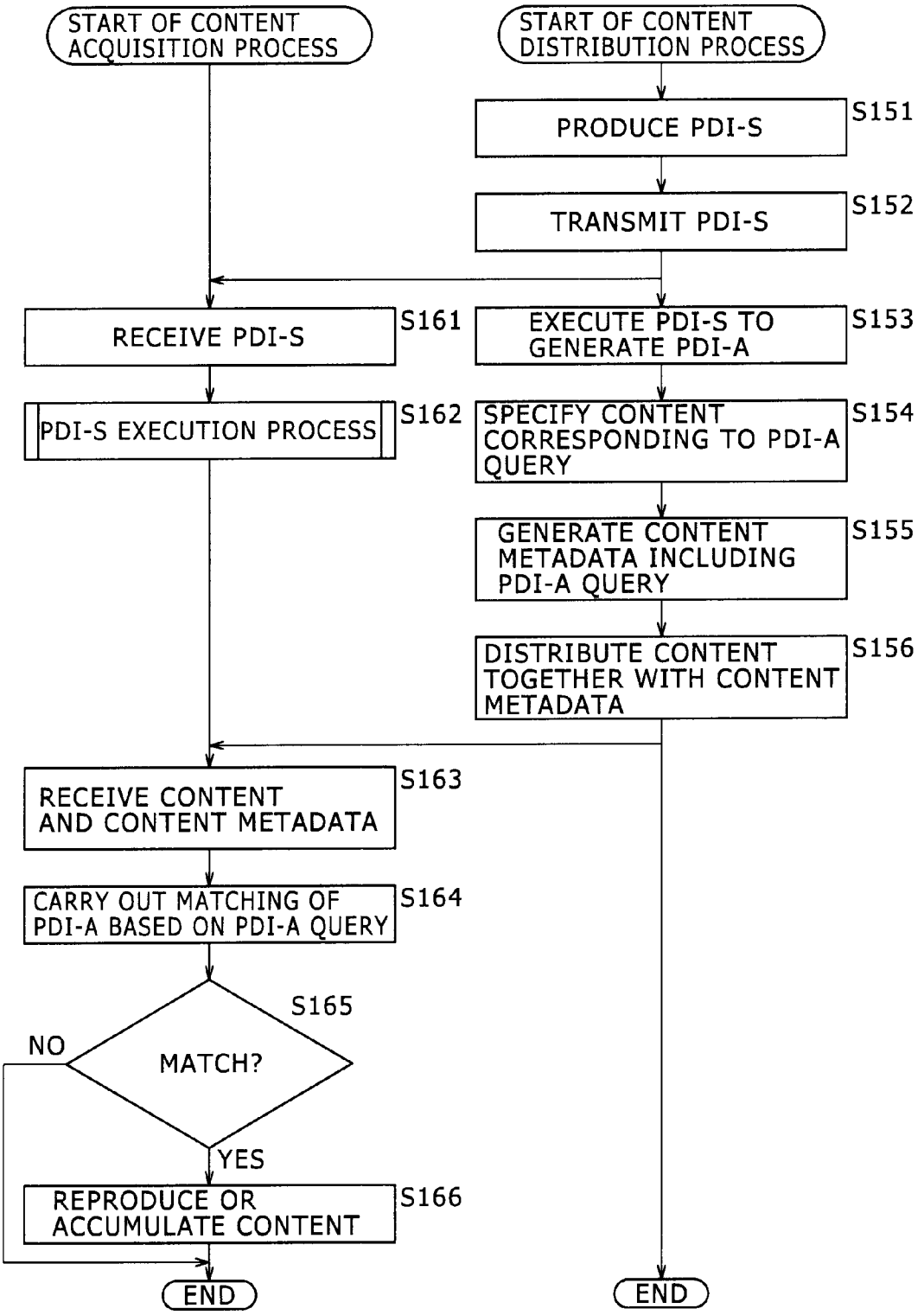
START OF CONTENT ACQUISITION PROCESS
START OF CONTENT DISTRIBUTION PROCESS
PRODUCE PDI-S
S151
TRANSMIT PDI-S
S152
RECEIVE PDI-S
S161
EXECUTE PDI-S TO GENERATE PDI-A
S153
PDI-S EXECUTION PROCESS
S162
SPECIFY CONTENT CORRESPONDING TO PDI-A QUERY
S154
GENERATE CONTENT METADATA INCLUDING PDI-A QUERY
S155
DISTRIBUTE CONTENT TOGETHER WITH CONTENT METADATA
S156
RECEIVE CONTENT AND CONTENT METADATA
S163
CARRY OUT MATCHING OF PDI-A BASED ON PDI-A QUERY
S164
S165
MATCH?
NO
YES
REPRODUCE OR ACCUMULATE CONTENT
S166
END
END

FIG. 46

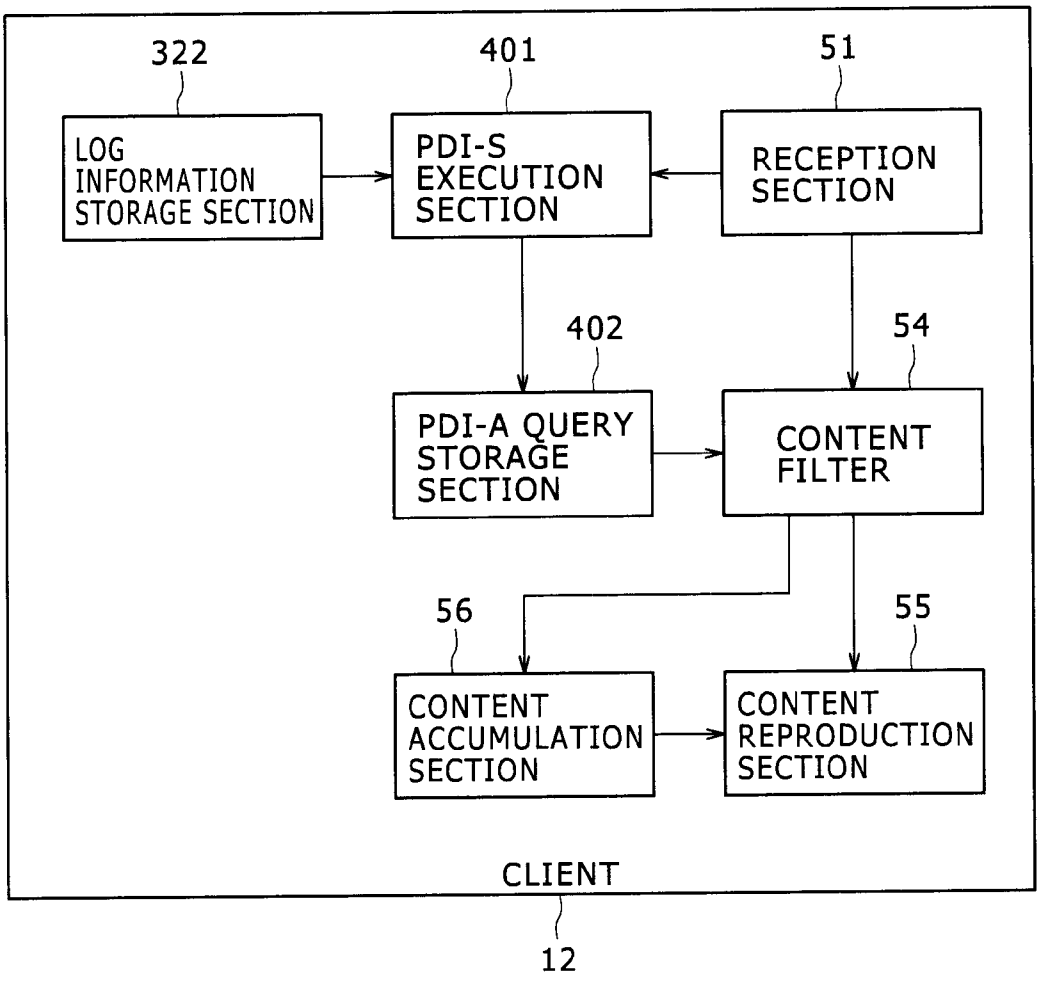
322
401
51
LOG INFORMATION STORAGE SECTION
PDI-S EXECUTION SECTION
RECEPTION SECTION
402
54
PDI-A QUERY STORAGE SECTION
CONTENT FILTER
56
55
CONTENT ACCUMULATION SECTION
CONTENT REPRODUCTION SECTION
CLIENT
12

FIG. 47

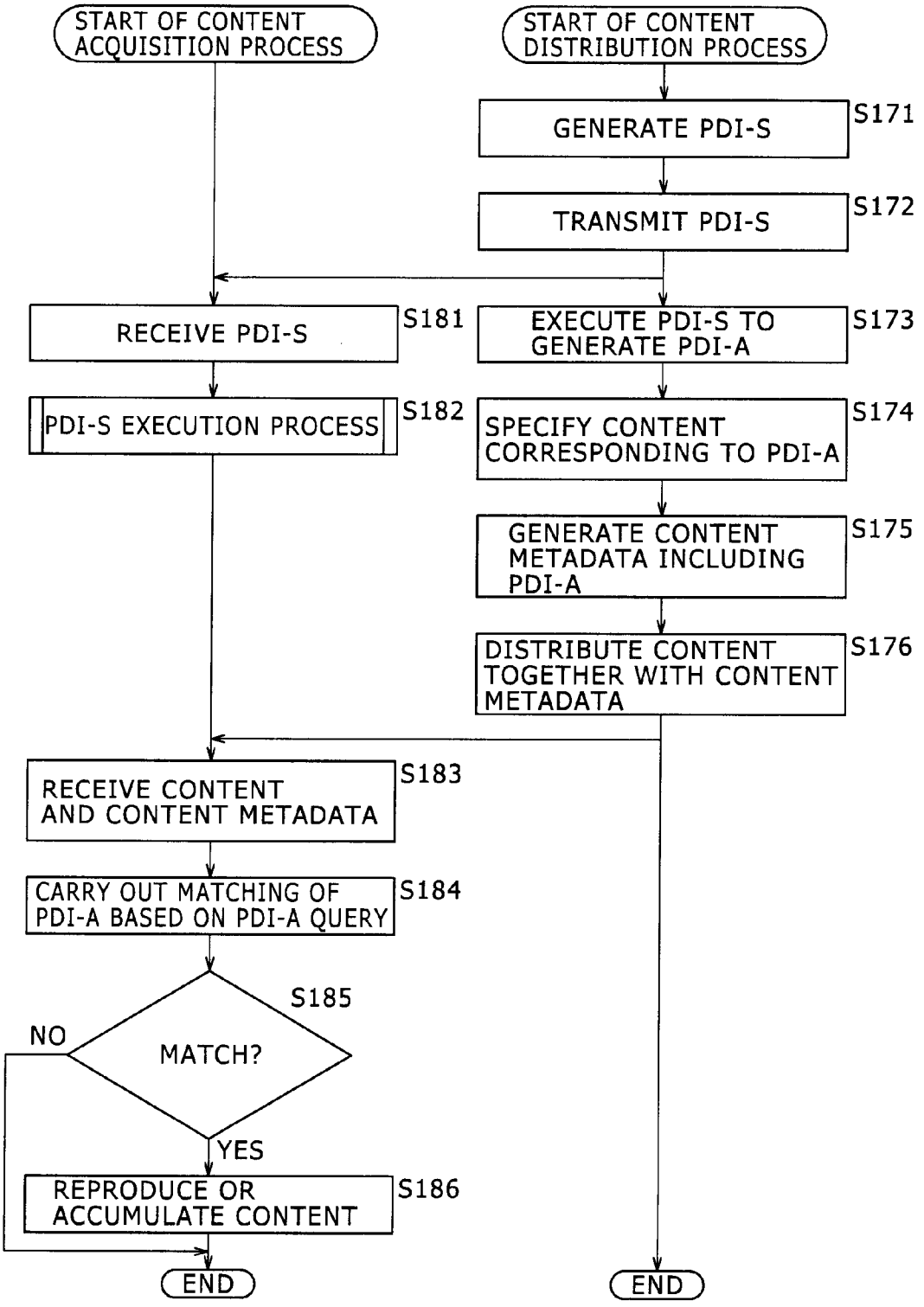
START OF CONTENT ACQUISITION PROCESS
START OF CONTENT DISTRIBUTION PROCESS
GENERATE PDI-S
S171
TRANSMIT PDI-S
S172
RECEIVE PDI-S
S181
EXECUTE PDI-S TO GENERATE PDI-A
S173
PDI-S EXECUTION PROCESS
S182
SPECIFY CONTENT CORRESPONDING TO PDI-A
S174
GENERATE CONTENT METADATA INCLUDING PDI-A
S175
DISTRIBUTE CONTENT TOGETHER WITH CONTENT METADATA
S176
RECEIVE CONTENT AND CONTENT METADATA
S183
CARRY OUT MATCHING OF PDI-A BASED ON PDI-A QUERY
S184
S185
MATCH?
NO
YES
REPRODUCE OR ACCUMULATE CONTENT
S186
END
END

FIG. 48

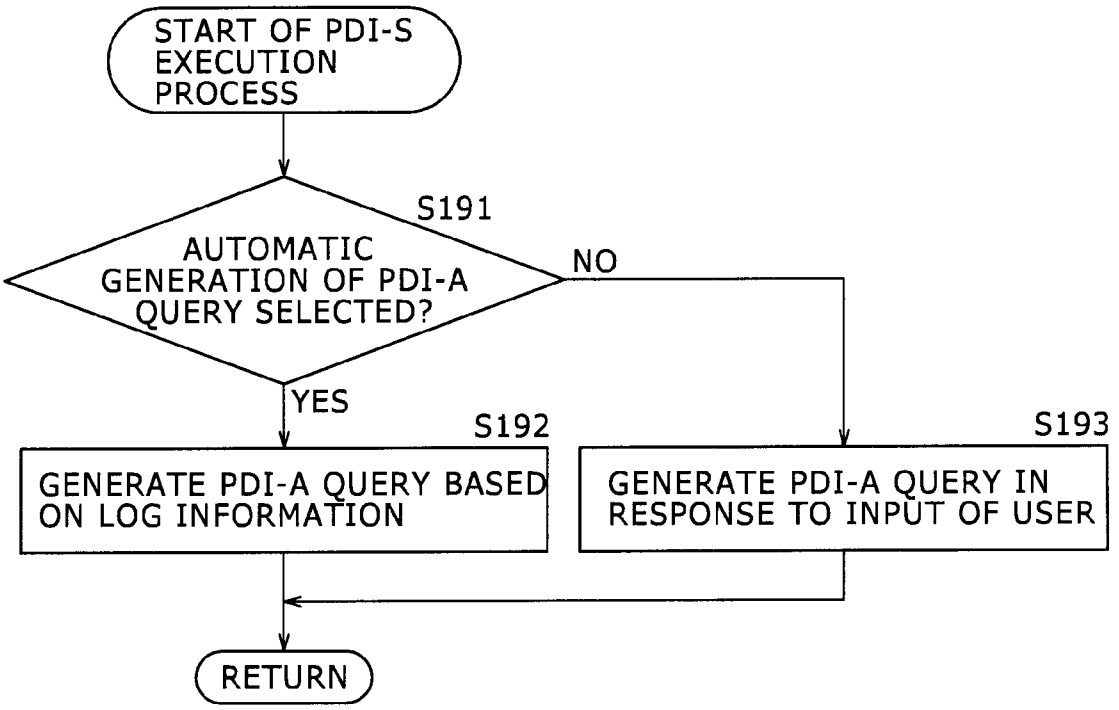
START OF PDI-S EXECUTION PROCESS
S191
AUTOMATIC GENERATION OF PDI-A QUERY SELECTED?
NO
YES
S192
GENERATE PDI-A QUERY BASED ON LOG INFORMATION
S193
GENERATE PDI-A QUERY IN RESPONSE TO INPUT OF USER
RETURN

FIG. 49

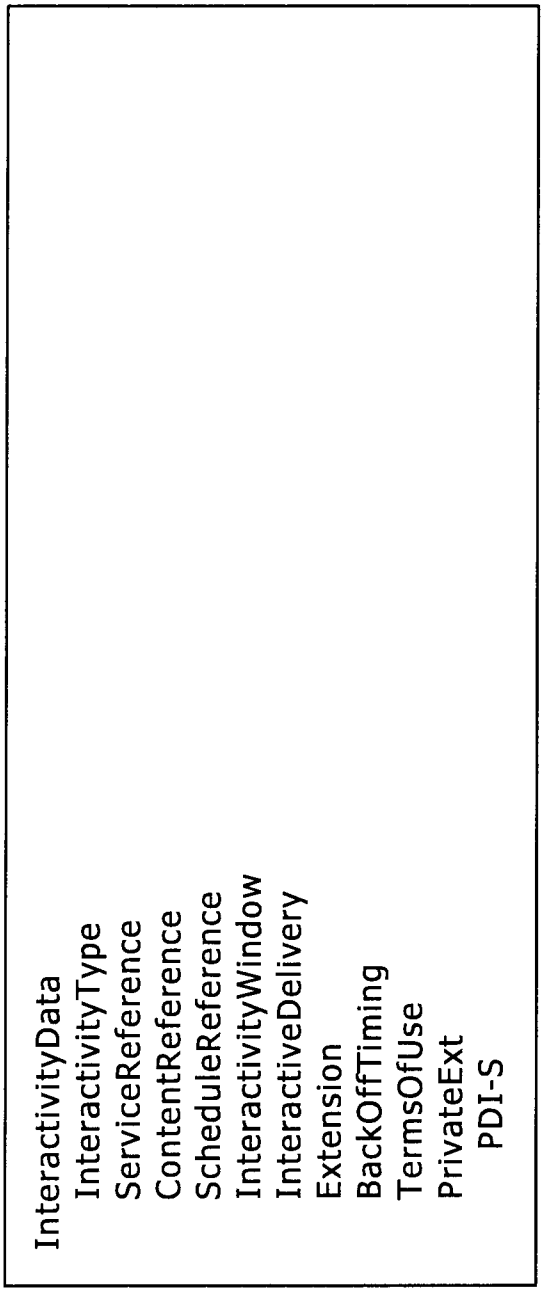
InteractivityData
InteractivityType
ServiceReference
ContentReference
ScheduleReference
InteractivityWindow
InteractiveDelivery
Extension
BackOffTiming
TermsOfUse
PrivateExt
PDI-S

FIG.50

Syntax	No. of bits	Format
PDI_descriptor() {		
descriptor_tag	8	0x(TBD)
descriptor_length	8	uimsbf
length	8	uimsbf
PDI_S or PDI_A or PDI_A_Query	var	-
}		

FIG. 51

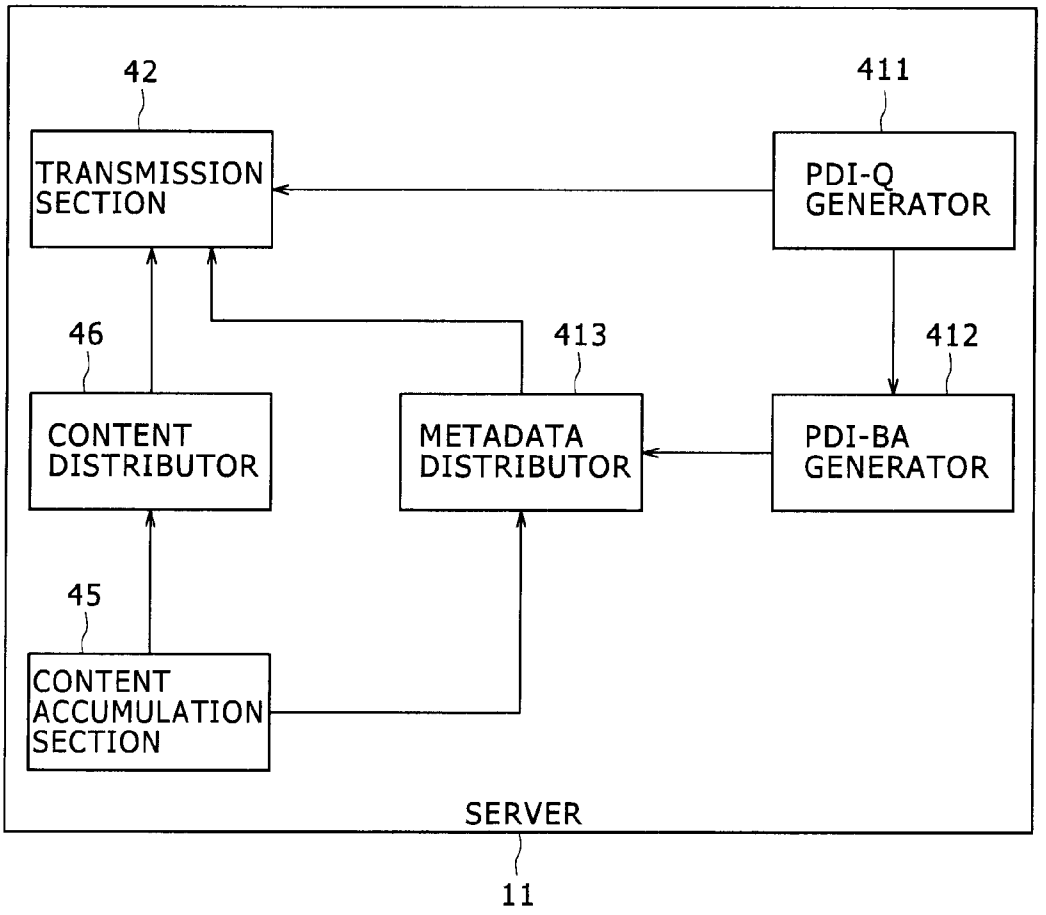
42
411
TRANSMISSION SECTION
PDI-Q GENERATOR
46
413
412
CONTENT DISTRIBUTOR
METADATA DISTRIBUTOR
PDI-BA GENERATOR
45
CONTENT ACCUMULATION SECTION
SERVER
11

FIG. 52

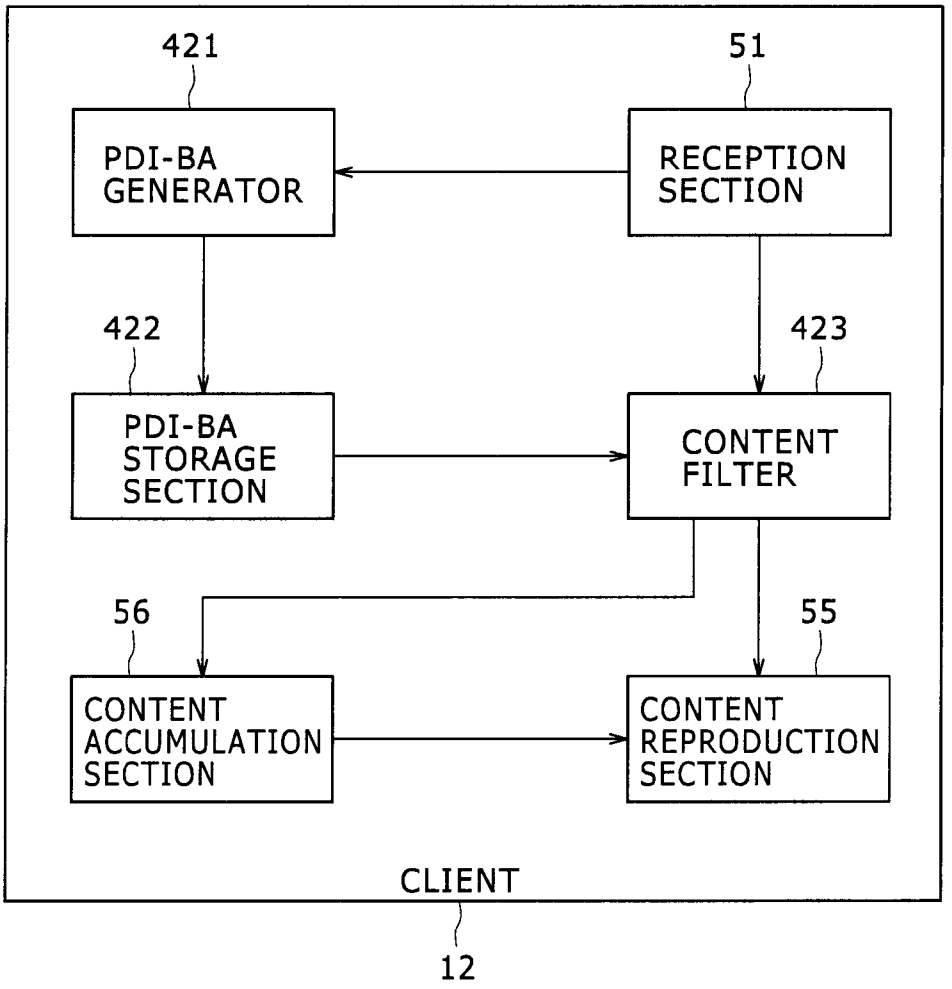
421
51
PDI-BA GENERATOR
RECEPTION SECTION
422
423
PDI-BA STORAGE SECTION
CONTENT FILTER
56
55
CONTENT ACCUMULATION SECTION
CONTENT REPRODUCTION SECTION
CLIENT
12

FIG. 53

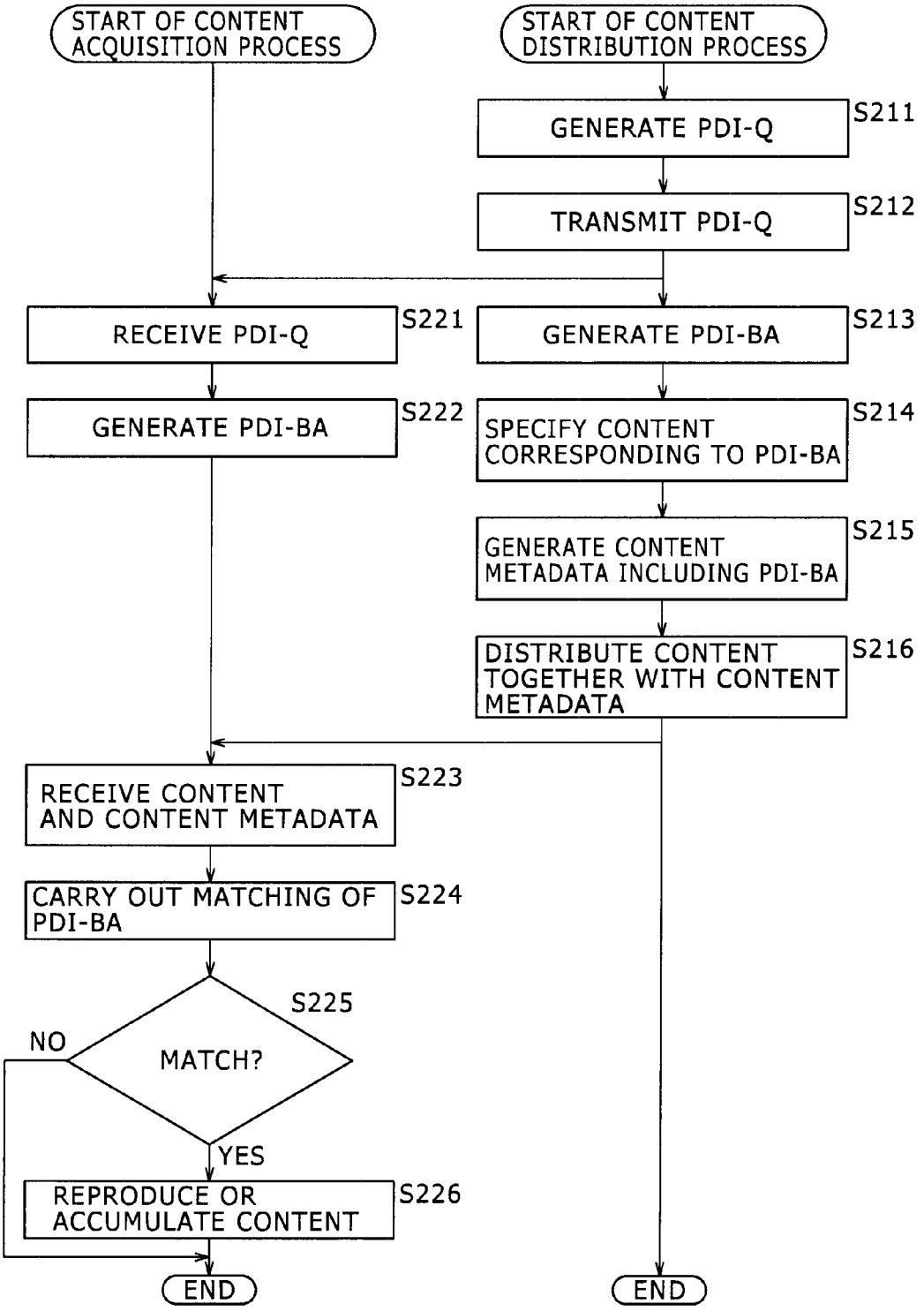
START OF CONTENT ACQUISITION PROCESS
START OF CONTENT DISTRIBUTION PROCESS
GENERATE PDI-Q
S211
TRANSMIT PDI-Q
S212
RECEIVE PDI-Q
S221
GENERATE PDI-BA
S213
GENERATE PDI-BA
S222
SPECIFY CONTENT CORRESPONDING TO PDI-BA
S214
GENERATE CONTENT METADATA INCLUDING PDI-BA
S215
DISTRIBUTE CONTENT TOGETHER WITH CONTENT METADATA
S216
RECEIVE CONTENT AND CONTENT METADATA
S223
CARRY OUT MATCHING OF PDI-BA
S224
S225
MATCH?
NO
YES
REPRODUCE OR ACCUMULATE CONTENT
S226
END
END

FIG. 54 A

```
1 : <xs:schema xmlns:xs="http://www.w3.org/2001/XMLSchema" elementFormDefault="qualified"
    attributeFormDefault="unqualified")
2 :       <xs:element name="PDItable" type="PDItableType"/>
3:        <xs:complexType name="PDItableType">
4:                  <xs:choice maxOccurs="unbounded">
5:                            <xs:element name="QIA" type="IntegerAnswerType"/>
6:                            <xs:element name="QBA" type="BooleanAnswerType"/>
7:                            <xs:element name="QSA" type="SelectionAnswerType"/>
8:                            <xs:element name="QTA" type="TextAnswerType"/>
9:                            <xs:element name="QAA" type="AnyAnswerType"/>
10:                 </xs:choice>
11:                 <xs:attribute name="transactional" type="xs:boolean" use="optional"/>
12:       </xs:complexType>
13:       <xs:complexType name="IntegerAnswerType">
14:                 <xs:sequence>
15:                           <xs:element name="id" type="xs:anyURI"/>
16:                           <xs:element name="q" type="xs:string" minOccurs="0"/>
17:                           <xs:element name="a" type="xs:integer" minOccurs="0"/>
18:                 </xs:sequence>
19:                 <xs:attribute name="minInclusive" type="xs:integer" use="optional"/>
20:                 <xs:attribute name="maxInclusive" type="xs:integer" use="optional"/>
21:       </xs:complexType>
22:       <xs:complexType name="BooleanAnswerType">
23:                 <xs:sequence>
24:                           <xs:element name="id" type="xs:anyURI"/>
25:                           <xs:element name="q" type="xs:string" minOccurs="0"/>
26:                           <xs:element name="a" type="xs:boolean" minOccurs="0"/>
27:                 </xs:sequence>
28:       </xs:complexType>
29:       <xs:complexType name=""SelectionAnswerType">
30:                 <xs:sequence>
31:                           <xs:element name="id" type="xs:anyURI"/>
32:                           <xs:element name="q" type="xs:string" minOccurs="0"/>
```

FIG. 54 B

```
                    <xs:element name="a" type="xs:string" minOccurs="0"
maxOccurs="unbounded"/>
            </xs:sequence>
            <xs:attribute name="minChoice" type="xs:integer" use="optional"/>
            <xs:attribute name="maxChoice" type="xs:integer" use="optional"/>
    </xs:complexType>
    <xs:complexType name="TextAnswerType">
             <xs:sequence>
                    <xs:element name="id" type="xs:anyURI"/>
                    <xs:element name="q" type="xs:string" minOccurs="0"/>
                    <xs:element name="a" type="xs:string" minOccurs="0"/>
             </xs:sequence>
    </xs:complexType>
    <xs:complexType name="AnyAnswerType")
            <xs:sequence>
                    <xs:element name="id" type="xs:anyURI"/>
                    <xs:element name="a" type="xs:base64Binary"/>
            </xs:sequence>
    </xs:complex Type>
    <xs:complexType name="BitmapAnyURI Type">
            <xs:simpleContent>
                    <xs:extension base="xs:anyURI">
                            <xs:attribute name="bmi" type="xs:string"
use="optional"/>
                    </xs:extension>
            </xs:simpleContent>
    </xs:complexType>
    <xs:complexType name="BitmapBooleanType">
            <xs:simpleContent>
                    <xs:extension base="xs:boolean">
                            <xs:attribute name="bmi" type="xs:string"
use="optional"/>
                    </xs:extension>
```

FIG. 55

```
63:                    </xs:simpleContent>
64:          </xs:complexType>
65:          <xs:complexType name="BitmapStringType">
66:                    <xs:simpleContent>
67:                              <xs:extension base="xs:string">
68:                                        <xs:attribute name="bmi" type="xs:string"
     use="optional"/>
69:                              </xs:extension>
70:                    </xs:simpleContent>
71:          </xs:complexType>
72:          <xs:complexType name="BitmapBase64BinaryType">
73:                    <xs:simpleContent>
74:                              <xs:extension base="xs:base64Binary">
75:                                        <xs:attribute name="bmi" type="xs:string"
     use="optional"/>
76:                              </xs:extension>
77:                    </xs:simpleContent>
78:          </xs:complexType>
79: </xs:schema>
```

FIG.56

```
<PDItable xmlns:xsi="http://www.w3.org/2001/XMLSchema-instance" xsi:noNamespaceSchemaLocation="PDItable.xsd">
  <QBA>
            <id bmi="00000000000101">Common:111</id>
            <q>Are you currently employed?</q> <!-True=1, False=0 -->
  </QBA>
  <QTA minInclusive="10" maxInclusive="100">
            <id>Common:222</id>
            <q>What is the age of the oldest member of the household who watches television?</q>
  </QTA>
  <QSA minChoice="1" maxChoice="3">
            <id bmi="00000100000111">ProviderA:123</id>
            <q>In which of the following sports are you most interested? (Multiple selection allowed)</q>
            <a bmi="0001">Baseball</a>
            <a bmi="0010">Basketball</a>
            <a bmi="0100">Soccer</a>
            <a bmi="1000">Hockey</a>
  </QSA>
  <QSA maxChoice="1">
            <id bmi="00000100000101">ProviderA:ProgramX:123</id>
            <q>Do you enjoy camping and outdoor recreation?(Only one selection)</q>
            <a bmi="001">Never</a>
            <a bmi="010">Occasionally</a>
            <a bmi="100">Frequently</a>
  </QSA>
  <QTA>
            <id>ProviderA:321</id>
            <q>Who's products are you most interested in recently?</q>
  </QTA>
</PDItable>
```

FIG. 57

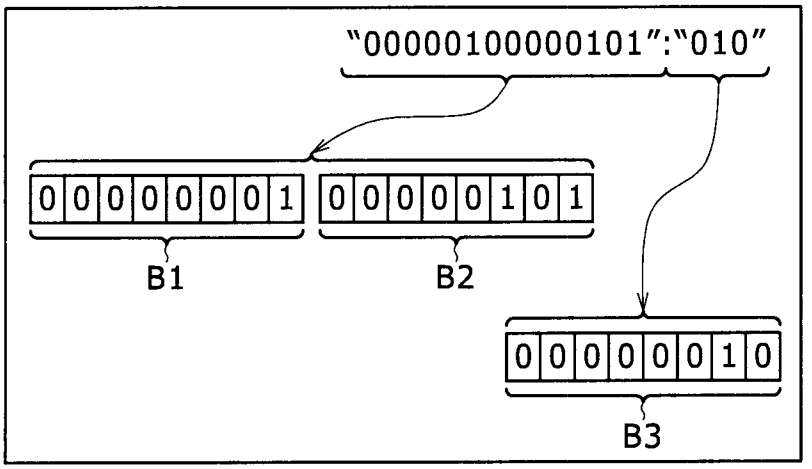

FIG. 58

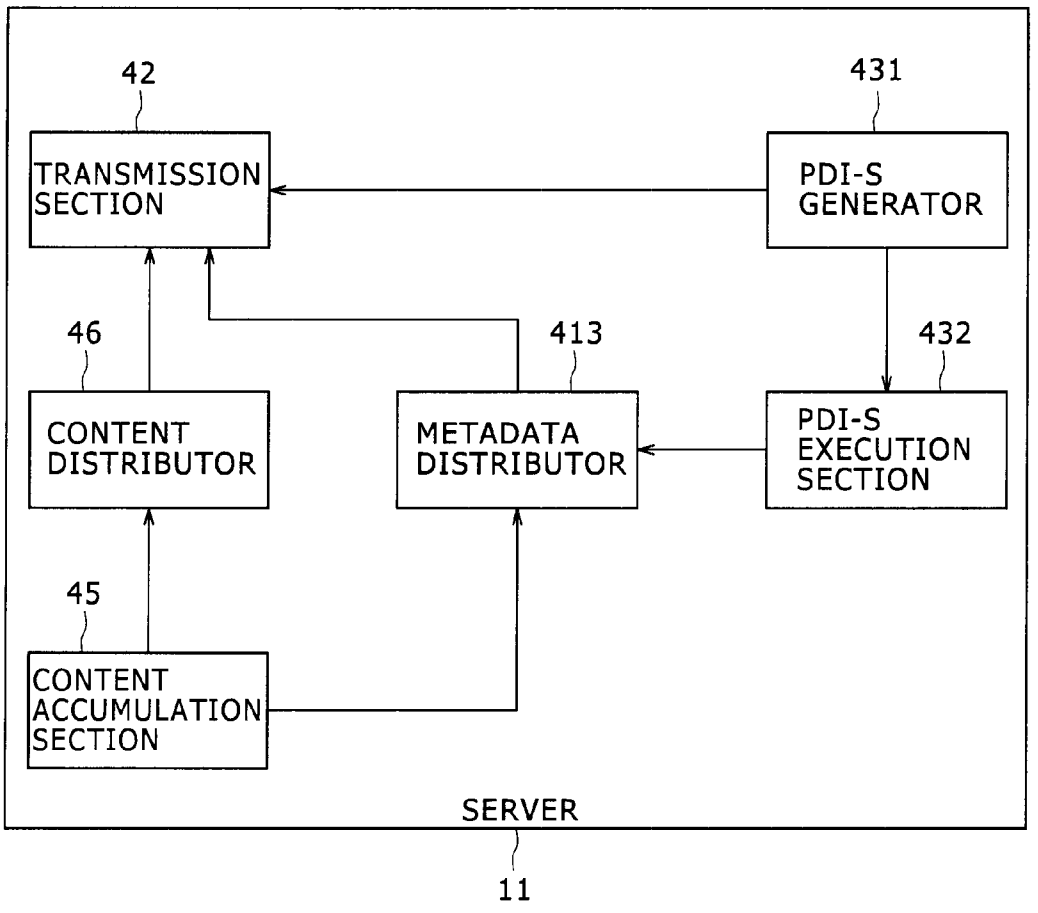
42
TRANSMISSION SECTION
431
PDI-S GENERATOR
46
CONTENT DISTRIBUTOR
413
METADATA DISTRIBUTOR
432
PDI-S EXECUTION SECTION
45
CONTENT ACCUMULATION SECTION
SERVER
11

FIG. 59

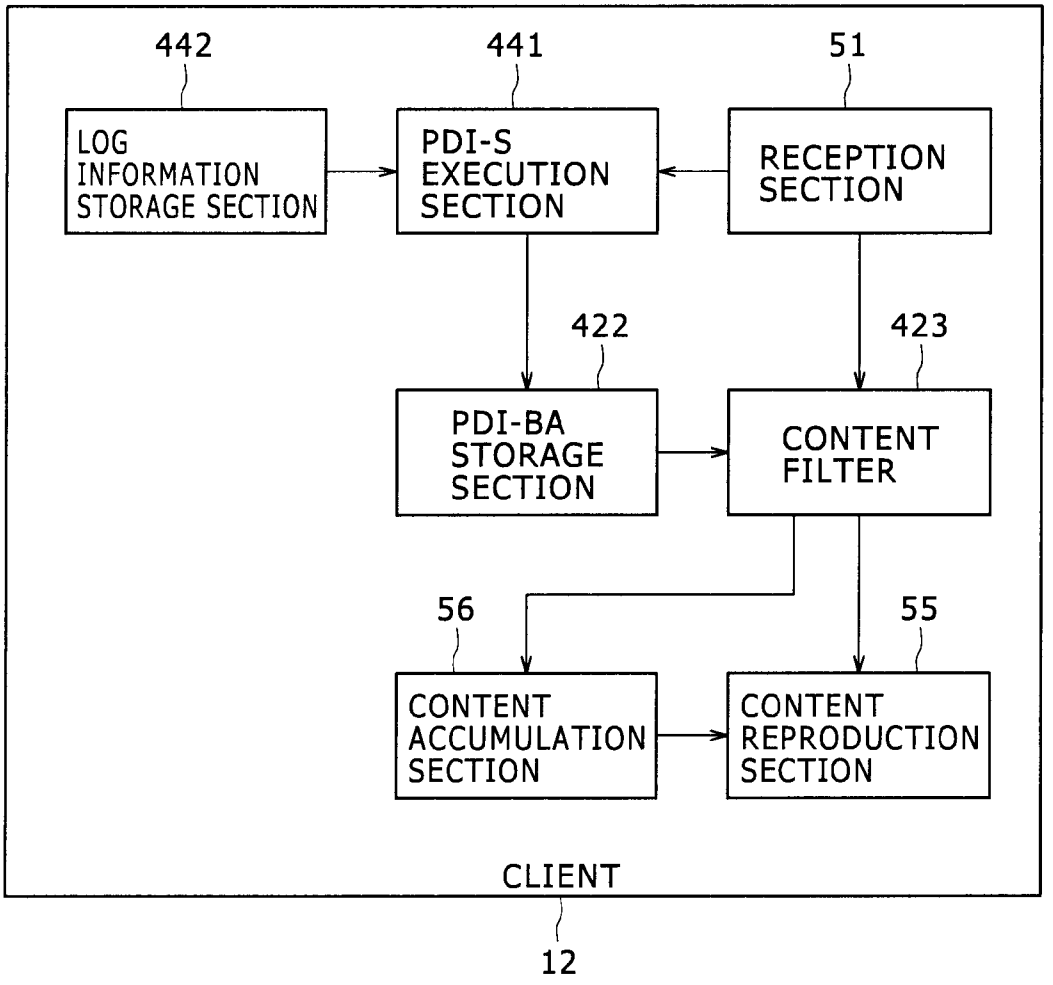
442
441
51
LOG INFORMATION STORAGE SECTION
PDI-S EXECUTION SECTION
RECEPTION SECTION
422
423
PDI-BA STORAGE SECTION
CONTENT FILTER
56
55
CONTENT ACCUMULATION SECTION
CONTENT REPRODUCTION SECTION
CLIENT
12

FIG. 60

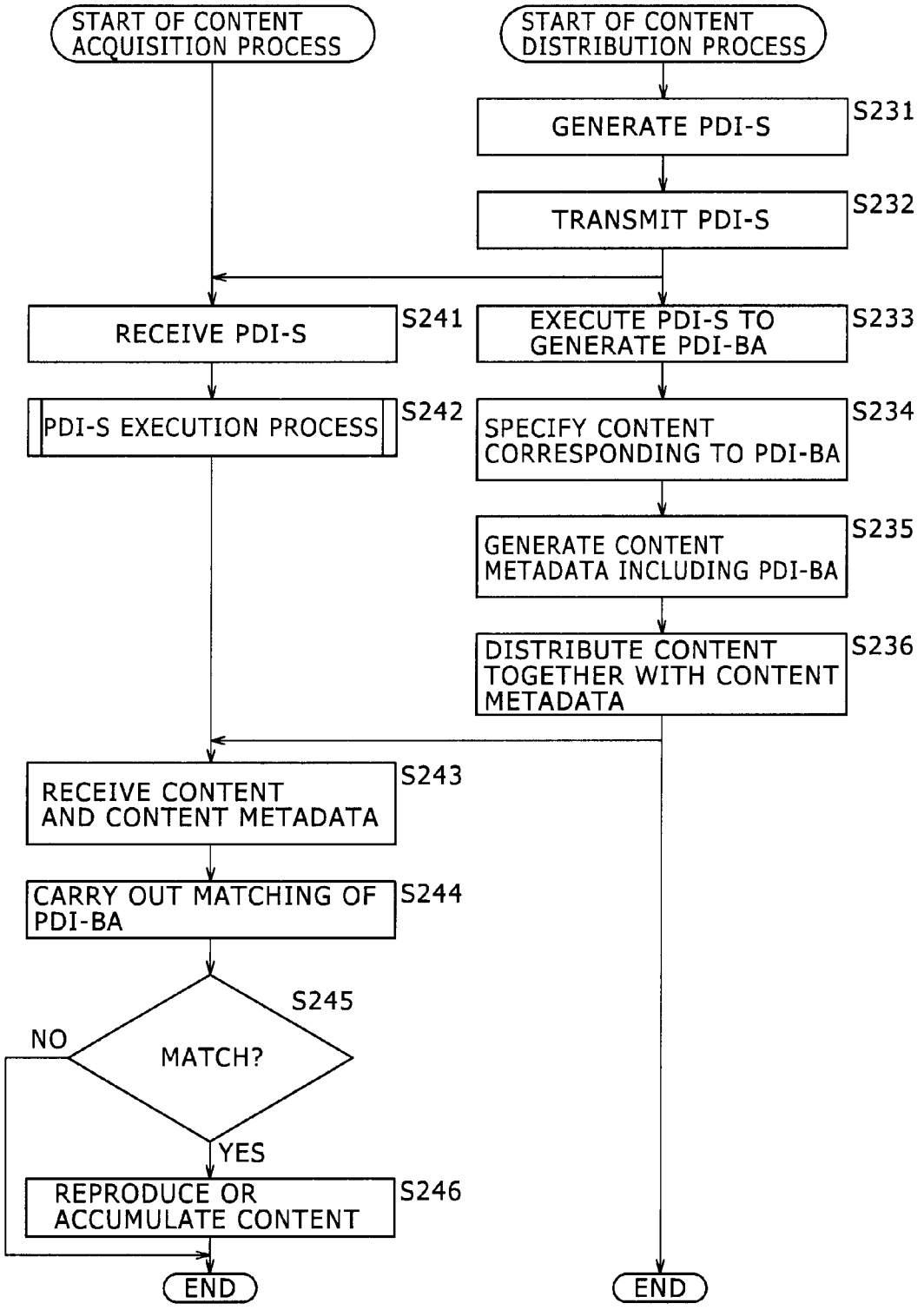
START OF CONTENT ACQUISITION PROCESS
START OF CONTENT DISTRIBUTION PROCESS
GENERATE PDI-S
S231
TRANSMIT PDI-S
S232
RECEIVE PDI-S
S241
EXECUTE PDI-S TO GENERATE PDI-BA
S233
PDI-S EXECUTION PROCESS
S242
SPECIFY CONTENT CORRESPONDING TO PDI-BA
S234
GENERATE CONTENT METADATA INCLUDING PDI-BA
S235
DISTRIBUTE CONTENT TOGETHER WITH CONTENT METADATA
S236
RECEIVE CONTENT AND CONTENT METADATA
S243
CARRY OUT MATCHING OF PDI-BA
S244
S245
MATCH?
NO
YES
REPRODUCE OR ACCUMULATE CONTENT
S246
END
END

FIG. 61

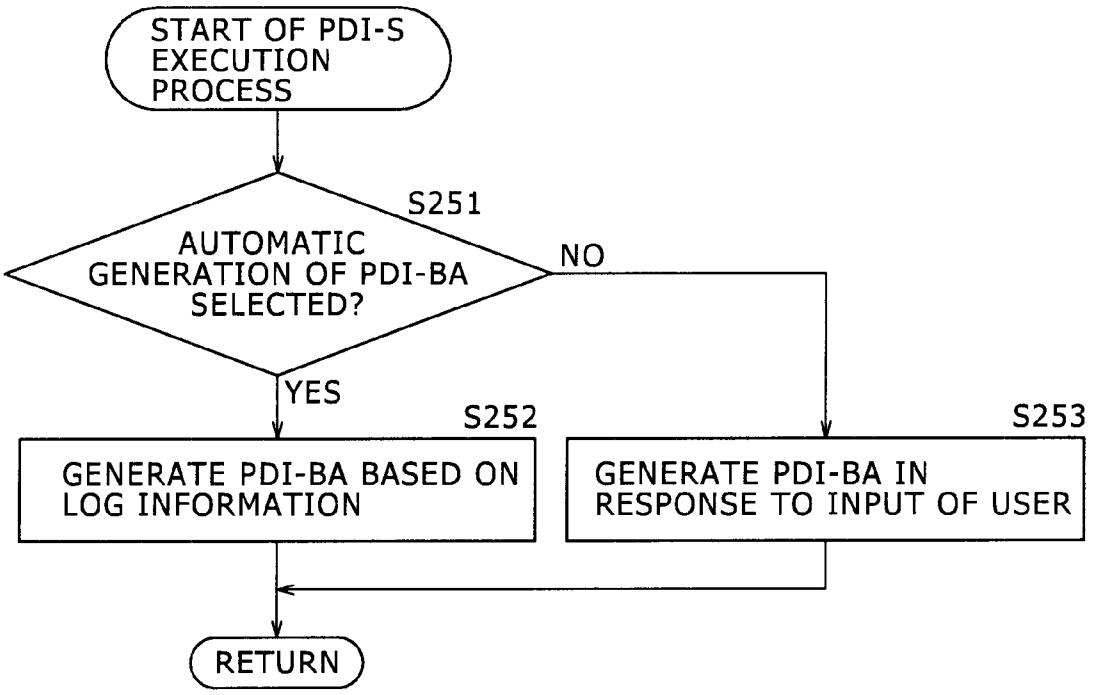
START OF PDI-S EXECUTION PROCESS
S251
AUTOMATIC GENERATION OF PDI-BA SELECTED?
NO
YES
S252
GENERATE PDI-BA BASED ON LOG INFORMATION
S253
GENERATE PDI-BA IN RESPONSE TO INPUT OF USER
RETURN

FIG.62

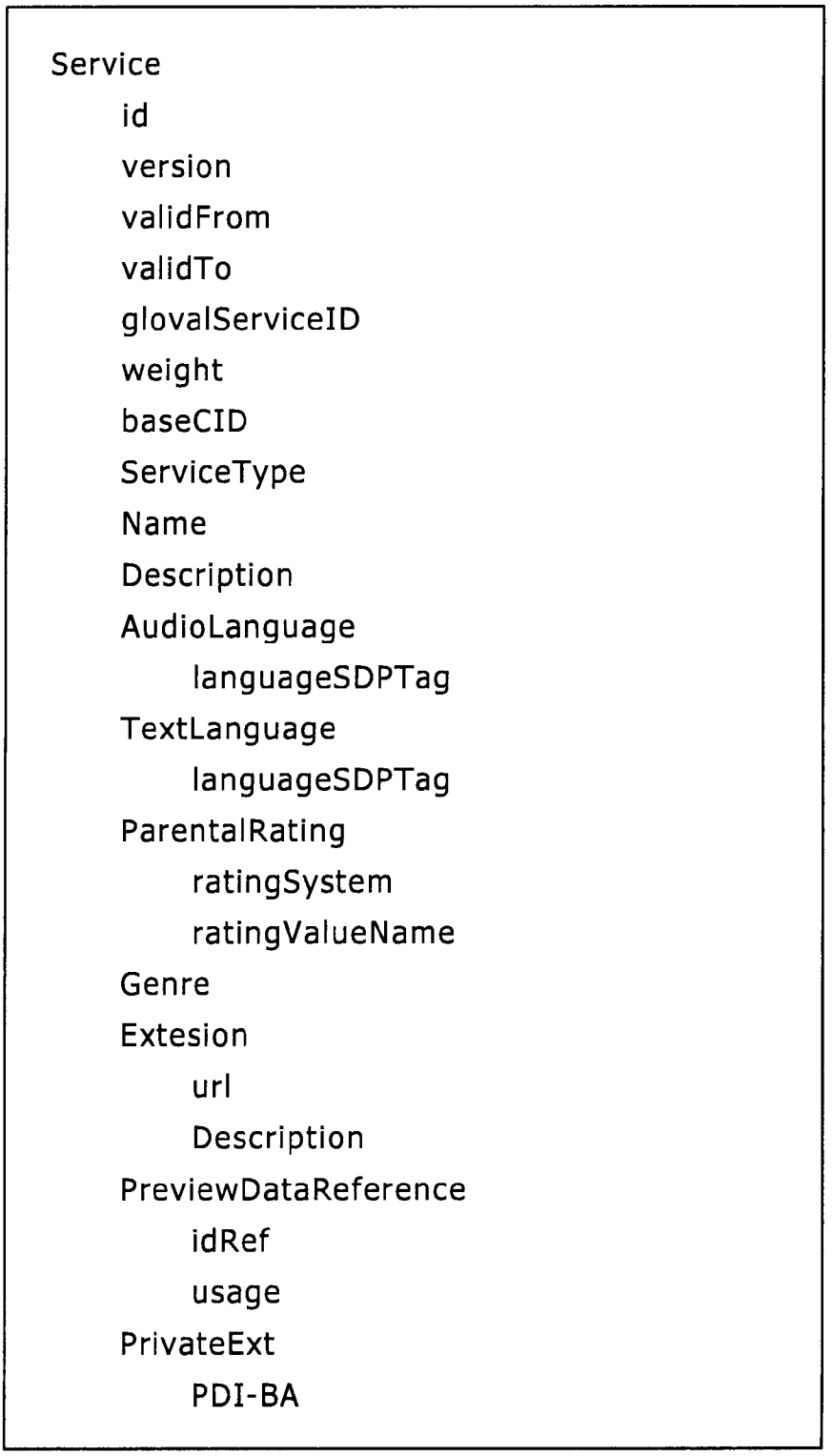
Service
id
version
validFrom
validTo
glovalServiceID
weight
baseCID
ServiceType
Name
Description
AudioLanguage
languageSDPTag
TextLanguage
languageSDPTag
ParentalRating
ratingSystem
ratingValueName
Genre
Extesion
url
Description
PreviewDataReference
idRef
usage
PrivateExt
PDI-BA

FIG.63

Schedule
id
version
defaultSchedule
onDemand
validFrom
validTo
ServiceReference
idRef
ContentReference
idRef
contentLocation
PresentationWindow
startTime
endTime
PrivateExt
PDI-BA

FIG. 64

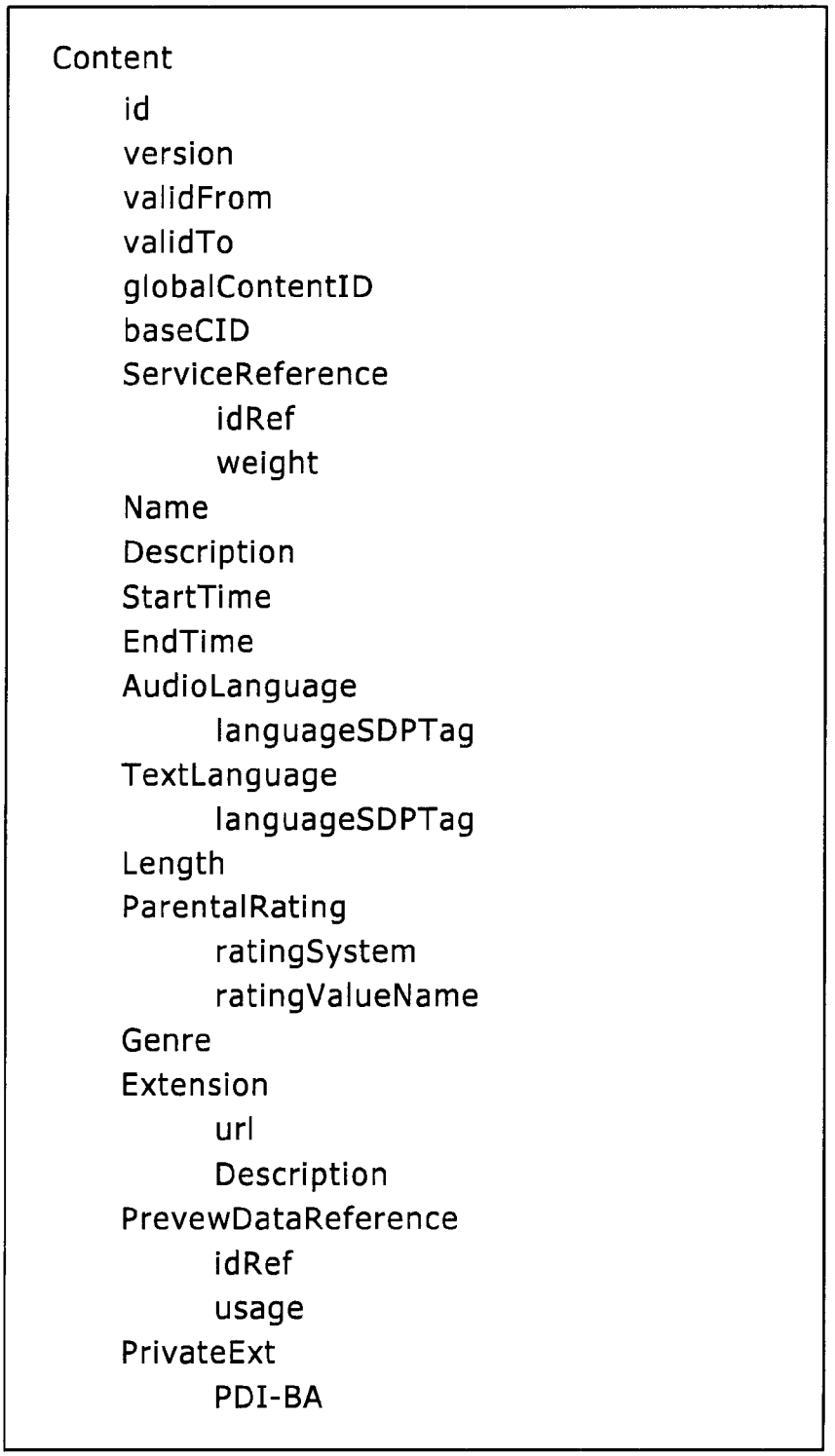
Content
id
version
validFrom
validTo
globalContentID
baseCID
ServiceReference
idRef
weight
Name
Description
StartTime
EndTime
AudioLanguage
languageSDPTag
TextLanguage
languageSDPTag
Length
ParentalRating
ratingSystem
ratingValueName
Genre
Extension
url
Description
PrevewDataReference
idRef
usage
PrivateExt
PDI-BA

FIG.65

Syntax	No. of bits	Format
PDI_descriptor() {		
descriptor_tag	8	0x(TBD)
descriptor_length	8	uimsbf
PDI_ length	8	uimsbf
PDI_BA	var	-
}		

TRANSMISSION AND RECEPTION APPARATUS, METHODS, AND SYSTEMS FOR FILTERING CONTENT

CROSS-REFERENCE TO RELATED APPLICATIONS

The present application is a non-provisional application of and claims the benefit of priority from U.S. Application No. 61/377,808, filed Aug. 27, 2010, the entire contents of which are incorporated herein by reference.

BACKGROUND OF THE INVENTION

1. Field of the Invention

This invention relates to a transmission apparatus and method, a reception apparatus and method, and a transmission and reception system, and more particularly to a transmission apparatus and method, a reception apparatus and method, and a transmission and reception system by which a content can be acquired in response to metadata.

2. Description of the Related Art

In recent years, together with digitalization of television broadcasting, the amount of information which can be broadcast at a time has increased dramatically, and various data are broadcast simultaneously together with a television program or content to be viewed on the real time basis.

Further, as a communication path for a content, a content download service which selectively uses the television broadcasting described above and the Internet which allows high speed downloading of data has been proposed and is disclosed, for example, in Japanese Patent Laid-Open No. 2010-21988.

Incidentally, in general content download services, a filtering attribute also called filtering index, filtering metadata or the like set by a server on the provider side which provides or distributes contents such as the content provider side or the service provider side is added as metadata to a content. Consequently, a client which receives or acquires the content can carry out filtering of the content.

The filtering attribute is set as a value of an element of metadata selected from within a metadata set prescribed by a standardization organization such as ATSC (Advanced Television Standard Committee) or ARIB (Association of Radio Industries and Businesses).

In particular, a content to which filtering attributes that "viewing target" is selected as an element of metadata and that "years of life between ten and nineteen" is set as a value regarding the element of the metadata are applied is provided to clients which carry out filtering so as to acquire a "content for a viewer whose "viewing target is viewers whose years of life are between ten and nineteen."

SUMMARY OF THE INVENTION

However, it is not available to apply metadata or a filtering attribute which is not included in a metadata set prescribed by a standardization organization to a content.

For example, even if the provider side wants to distribute a content whose "watching target is viewers of years of life between ten and nineteen" to viewers who "are interested in job-hunting," if a metadata set prescribed by a standardization organization does not include "whether or not a viewer is interested in job-hunting" as an element of metadata, then the provider side cannot apply a filtering attribute that "interested in job-hunting" is set as an element of metadata to the content.

Accordingly, the provider side cannot distribute a content to which a matter which satisfies current needs such as, for example, to take a trend into consideration and in which a viewer is interested is applied as metadata.

Further, in such a case as described above, the client side cannot carry out filtering so that a content which satisfies the needs at the time is obtained.

Therefore, it is desirable to provide a transmission apparatus and method, a reception apparatus and method, and a transmission and reception system by which a content which satisfies needs at the time can be acquired.

According to a first embodiment of the present invention, there is provided a transmission apparatus for distributing a content to a client, including question generation means for generating question information representative of a question regarding liking of a user of the client, and transmission means for transmitting the question information and provider side answer information in the form of a bit string representative of an answer set by a provider which provides the content to the question regarding the liking of the user to the client.

The transmission apparatus may further include metadata generation means for generating metadata including the provider side answer information as metadata of the content corresponding to the answer set by the provider, the transmission means transmitting the metadata to the client.

According to the first embodiment of the present invention, there is provided also a transmission method for a transmission apparatus for distributing a content to a client, including the steps of generating question information representative of a question regarding liking of a user of the client, and transmitting the question information and provider side answer information in the form of a bit string representative of an answer set by a provider which provides the content to the question regarding the liking of the user to the client.

In the transmission apparatus and the transmission method, question information representative of a question regarding liking of a user of the client is generated. Then, the generated question information and provider side answer information in the form of a bit string representative of an answer set by a provider which provides the content to the question regarding the liking of the user are transmitted to the client.

According to a second embodiment of the present invention, there is provided a reception apparatus for acquiring a content distributed from a server, including answer generation means for generating, in response to question information representative of a question regarding liking of a user and transmitted from the server to the reception apparatus, user side answer information in the form of a bit string representative of an answer of the user to the question, and matching means for carrying out matching between the answer information and provider side answer information in the form of a bit string representative of an answer set by a provider which provides the content to the question and transmitted from the server to the reception apparatus to determine acquisition of the content distributed from the server.

The matching means may carry out the matching to determine acquisition of the content corresponding to metadata including the provider side answer information.

According to the second embodiment of the present invention, there is provided also a reception method for a reception apparatus for acquiring a content distributed from a server, including the steps of generating, in response to question information representative of a question regarding liking of a user and transmitted from the server to the reception apparatus, user side answer information in the form of a bit string representative of an answer of the user to the question, and

carrying out matching between the answer information and provider side answer information in the form of a bit string representative of an answer set by a provider which provides the content to the question and transmitted from the server to the reception apparatus to determine acquisition of the content distributed from the server.

In the reception apparatus and the reception method, in response to question information representative of a question regarding liking of a user and transmitted from the server to the reception apparatus, user side answer information in the form of a bit string representative of an answer of the user to the question is generated. Then, matching between the generated answer information and provider side answer information in the form of a bit string representative of an answer set by a provider which provides the content to the question and transmitted from the server is carried out to determine acquisition of the content distributed from the server.

According to a third embodiment of the present invention, there is provided a transmission and reception system, including a transmission apparatus adapted to distribute a content, and a reception apparatus adapted to acquire the content distributed from the transmission apparatus, the transmission apparatus including question generation means for generating question information representative of a question regarding liking of a user of the reception apparatus, and transmission means for transmitting the question information and provider side answer information in the form of a bit string representative of an answer set by a provider which provides the content to the question regarding the liking of the user to the reception apparatus, the reception apparatus including answer generation means for generating user side answer information in the form of a bit string representative of an answer of the user to the question in response to the question information transmitted from the transmission apparatus, and matching means for carrying out matching between the user side answer information and the provider side answer information transmitted from the transmission apparatus to determine acquisition of the content distributed from the transmission apparatus.

In the transmission and reception system, question information representative of a question regarding liking of a user of the reception apparatus is generated. Then, the question information and provider side answer information in the form of a bit string representative of an answer set by a provider which provides the content to the question regarding the liking of the user is transmitted to the reception apparatus. User side answer information in the form of a bit string representative of an answer of the user to the question is generated in response to the question information transmitted to the reception apparatus from the transmission apparatus. Then, matching between the generated user side answer information and the provider side answer information transmitted from the transmission apparatus is carried out to determine acquisition of the content distributed from the transmission apparatus.

With the transmission apparatus and method, reception apparatus and method, and transmission and reception system, it becomes possible to acquire a content which satisfies needs at the time.

BRIEF DESCRIPTION OF THE DRAWINGS

FIG. **1** is a block diagram showing an example of a configuration of a broadcasting system according to a first embodiment of the present invention;

FIG. **2** is a block diagram showing an example of a hardware configuration of a server;

FIG. **3** is a block diagram showing a functional configuration of the server;

FIG. **4** is a block diagram showing an example of a functional configuration of a client;

FIG. **5** is a flow chart illustrating content transmission and reception processes;

FIG. **6** is a view illustrating an example of syntax of the XML schema;

FIG. **7** is a view illustrating an example of a PDI-Q;

FIGS. **8** to **12** are schematic views showing different examples of screen image display in interaction with a user;

FIG. **13** is a view illustrating an example of a PDI-A;

FIGS. **14** and **15** are views illustrating different examples of a provider side PDI-A;

FIG. **16** is a block diagram showing another example of a functional configuration of the server;

FIG. **17** is a flow chart illustrating different content transmission and reception processes in the broadcasting system which includes the server of FIG. **16**;

FIG. **18** is a block diagram showing another example of a functional configuration of the client;

FIG. **19** is a flow chart illustrating content transmission and reception processes in the broadcasting system of FIG. **1** which includes the client of FIG. **18**;

FIG. **20** is a block diagram showing an example of a broadcasting system for broadcasting by an ATSC-M/H method to which the present invention is applied;

FIG. **21** is a diagrammatic view illustrating a protocol stack of a signal of a carrier transmitted by the ATSC-M/H method;

FIG. **22** is a block diagram illustrating a data configuration of Service Guide;

FIG. **23** is a view illustrating a configuration of a Service fragment;

FIG. **24** is a view illustrating a configuration of a Schedule fragment;

FIG. **25** is a view illustrating a configuration of a Content fragment;

FIG. **26** is a view illustrating a configuration of an Interactivity Data fragment;

FIG. **27** is a diagrammatic view illustrating a protocol stack of a signal of a carrier transmitted by NRT broadcasting;

FIG. **28** is a diagrammatic view illustrating a data structure of TVCT, PAT, PMT and DSM-CC Addressable Section;

FIG. **29** is a diagrammatic view illustrating a data structure of SMT, NRT-IT and FLUTE FDT;

FIG. **30** is a view illustrating an example of syntax of a PDI descriptor;

FIG. **31** is a block diagram showing an example of a functional configuration of a server according to a second embodiment of the present invention;

FIG. **32** is a block diagram showing an example of a functional configuration of a client according to the second embodiment of the present invention;

FIG. **33** is a flow chart illustrating content transmission and reception processes of the server of FIG. **31** and the client of FIG. **32**;

FIG. **34** is a view illustrating another example of syntax of the XML schema;

FIG. **35** is a flow chart illustrating details of a PDI-S execution process illustrated in FIG. **33**;

FIGS. **36** to **40** are schematic views showing different examples of screen image display in interaction with a user different from those of FIGS. **8** to **12**;

FIG. **41** is a view illustrating an example of a user side PDI-A;

FIGS. **42** and **43** are views illustrating different examples of a provider side PDI-A different from those of FIGS. **14** and **15**;

FIG. **44** is a block diagram showing another example of a functional configuration of the server different from that of FIG. **31**;

FIG. **45** is a flow chart illustrating content transmission and reception processes of the server of FIG. **44** and the client of FIG. **32**;

FIG. **46** is a block diagram showing another example of a functional configuration of a client which is a modification to that of FIG. **32**;

FIG. **47** is a flow chart illustrating content transmission and reception processes of the server of FIG. **44** and the client of FIG. **46**;

FIG. **48** is a flow chart illustrating details of a PDI-S execution process of FIG. **47**;

FIG. **49** is a view illustrating different syntax of the Interactivity Data fragment;

FIG. **50** is a view illustrating another example of the PDI descriptor;

FIG. **51** is a block diagram showing an example of a functional configuration of a server according to a third embodiment of the present invention;

FIG. **52** is a block diagram showing an example of a functional configuration of a client according to the third embodiment of the present invention;

FIG. **53** is a flow chart illustrating content transmission and reception processes of the server of FIG. **51** and the client of FIG. **52**;

FIGS. **54** and **55** are views illustrating a further example of syntax of the XML schema;

FIG. **56** is a view illustrating another example of the PDI-Q;

FIG. **57** is a diagrammatic view illustrating an example of mapping of a PDI-BA;

FIG. **58** is a block diagram showing a different example of a functional configuration of a server which is a modification to that of FIG. **51**;

FIG. **59** is a block diagram showing a different example of a functional configuration of a client which is a modification to that of FIG. **52**;

FIG. **60** is a flow chart illustrating content transmission and reception processes of the server of FIG. **58** and the client of FIG. **59**;

FIG. **61** is a flow chart illustrating details of a PDI-S execution process of FIG. **60**;

FIG. **62** is a view illustrating another configuration of the Service fragment;

FIG. **63** is a view illustrating another configuration of the Schedule fragment;

FIG. **64** is a view illustrating another configuration of the Content fragment; and

FIG. **65** is a view illustrating a further example of syntax of the PDI descriptor.

DETAILED DESCRIPTION OF THE PREFERRED EMBODIMENTS

In the following, preferred embodiments of the present invention are described with reference to the accompanying drawings. It is to be noted that the description is carried out in the following order.

1. First Embodiment
2. Second Embodiment
3. Third Embodiment

1. First Embodiment

Example of the Configuration of the Broadcasting System

FIG. **1** shows an example of a configuration of a broadcasting system according to an embodiment of the present invention.

The broadcasting system **10** of FIG. **1** is configured from a server **11** provided on the provider side such as a broadcasting company which broadcasts or provides a digital television program (hereinafter referred to suitably as content) and a client terminal (hereinafter referred to simply as client) **12** installed in a home of a user who enjoys broadcast contents. It is to be noted that, while the client **12** is installed in a plurality of user homes, the client **12** can be configured also as a portable terminal apparatus such as a portable telephone set or a PDA (Personal Digital Assistant).

In the broadcasting system **10**, the server **11** transmits a content together with content metadata regarding the content as a signal of a digital broadcasting wave to the client **12**. The client **12** carries out filtering of the content based on the content metadata transmitted thereto together with the content so that only the content desired by the user is reproduced or accumulated. It is to be noted that the content metadata may not be transmitted together with the content but may be transmitted before the content is transmitted.

Example of the Hardware Configuration of the Server

FIG. **2** shows an example of a hardware configuration of the server **11**. Referring to FIG. **2**, the server **11** is configured, for example, using a computer as a base.

A CPU (Central Processing Unit) **21** executes various processes in accordance with a program stored in a ROM (Read Only Memory) **22** or a program loaded from a storage section **28** into a RAM (Random Access Memory) **23**. Data necessary for executing various processes by the CPU **21** and so forth are suitably stored into the RAM **23**.

The CPU **21**, ROM **22** and RAM **23** are connected to each other through a bus **24**. Also an input/output interface **25** is connected to the bus **24**.

To the input/output interface **25**, an inputting section **26** configured from a keyboard, a mouse and so forth, an outputting section **27** configured from a display unit such as a CRT (Cathode Ray Tube), an LCD (Liquid Crystal Display) unit or the like, a speaker and so forth, the storage section **28** configured from a hard disk and so forth and a communication section **29** configured from a modem, a terminal adapter and so forth are connected. The communication section **29** communicates with an external apparatus through a network not shown. Further, a program may be acquired through the communication section **29** and stored into the storage section **28**.

Further, a drive unit **30** is connected to the input/output interface **25** as occasion demands and a removable medium **31** such as a magnetic disk, an optical disk, a magneto-optical disk or a semiconductor memory is suitably loaded into to the input/output interface **25**. A computer program read out from such a removable medium as just described is installed into the storage section **28** as occasion demands.

It is to be noted that, though not shown, the hardware of the client **12** is configured similarly to the server **11** as shown in FIG. **2**.

Example of the Functional Configuration of the Server

Next, an example of a functional configuration of the server **11** is described with reference to FIG. **3**.

The server **11** is configured from a PDI-Q generator **41**, a transmission section **42**, a PDI-A generator **43**, a metadata distributor **44**, a content accumulation section **45** and a content distributor **46**.

The PDI-Q generator **41** generates a PDI-Q (Preference Demographic and Interest-Question) which is information representative of questions regarding the liking of the user or viewer of the client **12**. Then, the PDI-Q generator **41** transmits the generated PDI-Q to the client **12** through the transmission section **42** and supplies the PDI-Q to the PDI-A generator **43**.

The transmission section **42** transmits various data supplied thereto from the PDI-Q generator **41**, metadata distributor **44** and content distributor **46** to the client **12**.

The PDI-A generator **43** generates, based on the PDI-Q from the PDI-Q generator **41**, a PDI-A (Preference Demographic and Interest-Answer) which is information representative of an answer set on the provider side to the questions regarding the liking of the user of the client **12** described above and corresponds to the PDI-Q. The PDI-A generator **43** supplies the generated PDI-A to the metadata distributor **44**.

The metadata distributor **44** specifies or refers to a content corresponding to the answer set on the provider side from among contents accumulated in the content accumulation section **45** based on the PDI-A from the PDI-A generator **43**. The metadata distributor **44** generates content metadata including the PDI-A as content metadata of the specified content and transmits the generated data to the client **12** through the transmission section **42**.

The content accumulation section **45** accumulates various contents to be distributed to the client **12**.

The content distributor **46** acquires the content specified by the metadata distributor **44** from among the contents accumulated in the content accumulation section **45** and transmits the acquired content to the client **12** through the transmission section **42**.

Example of the Functional Configuration of the Client

Next, an example of a functional configuration of the client **12** is described with reference to FIG. **4**.

The client **12** is configured from a reception section **51**, a PDI-A generator **52**, a PDI-A storage section **53**, a content filter **54**, a content reproduction section **55** and a content accumulation section **56**.

The reception section **51** receives various data transmitted from the server **11** and supplies the received data to the PDI-A generator **52** or the content filter **54**.

The PDI-A generator **52** generates, based on the PDI-Q transmitted from the server **11**, a PDI-A which indicates answers of the user to questions regarding the liking of the user of the client **12** and corresponds to the PDI-Q to supply to the PDI-A storage section **53**.

The PDI-A storage section **53** stores the PDI-A from the PDI-A generator **52**. The PDI-A stored in the PDI-A storage section **53** is suitably read out to the content filter **54**.

The content filter **54** reads out the PDI-A from the PDI-A storage section **53** and carries out filtering of the content based on the read out PDI-A and a PDI-A included in content metadata of the content received from the server **11**. The content filter **54** supplies the filtered content to the content reproduction section **55** or the content accumulation section **56** in response to a result of the filtering.

The content reproduction section **55** reproduces the content from the content filter **54**. Further, the content reproduction section **55** acquires the content from the content accumulation section **56** and reproduces the acquired content.

The content accumulation section **56** accumulates or records the content from the content filter **54**.

Example of the Transmission and Reception Processes of a Content

Next, transmission and reception processes of a content in the broadcasting system **10** are described with reference to a flow chart of FIG. **5**. In the content transmission and reception processes of the broadcasting system **10**, a content is distributed by executing a content distribution process by the server **11** and is acquired by executing a content acquisition process by the client **12**.

On the case where, on the provider side such as a broadcasting company, for example, a sponsor of a content to be broadcast or distributed or the broadcasting company itself requests distribution of a content for a viewer having a specific liking or a specific attribute, the PDI-Q generator **41** of the server **11** generates, at step S**11**, a PDI-Q for inquiring about what liking or attribute the user has to the viewer, that is, to the user of the client **12**, in response to operation of the staff on the provider side.

Example of the Syntax of the XML Schema

Here, an example of the syntax of the XML (Extensible Markup Language) schema for configuring a PDI-Q and a PDI-A is described with reference to FIG. **6**.

In FIG. **6**, the first row indicates a declaration or a definition for identifying the PDI-Q, and the second row indicates a name of the entire questions defined as the PDI-Q and a declaration of the type.

The third to twelfth rows indicate a name and a declaration of the type regarding the individual questions declared in the second row. In particular, the type "IntegerAnswerType" of a question defined by the name "QIA" in the fifth row indicates that the question requests an integer value type answer, and the type "BooleanAnswerType" of the question defined by the name "QBA" in the sixth row indicates that the question requests a logical value type answer. Further, the type "SelectionAnswerType" of the question defined by the name "QSA" in the seventh row indicates that the question requests an answer selection type answer, and the type "TextAnswerType" of the question defined by the name "QTA" in the eighth row indicates that the question requests a character column type answer. Further, the type "AnyAnswerType" of the question defined by the name "QAA" in the ninth row indicates that the question does not the type of an answer thereto.

The thirteenth to 44th rows indicate declarations of elements of the questions defined by the names "QIA," "QBA," "QSA" and "QTA" from among the questions declared as described above. Particularly, id elements indicated in the 15th, 24th, 31st and 40th rows indicate IDs (Identifiers) for identifying items of the questions, and are defined as given below as a first format:

"common:[category:]question-ID"

In the first format, the term "common" indicates that the question identified by the id element is a question commonly defined independently of the provider, and the term "category" indicates a category of the question and the term "question-ID" indicates an identifier of the question. It is to be noted that the term "category" may be represented, as occasion demands, in a hierarchical nest structure like:

"common:[category1:category2:category3: . . .] question-ID"

Further, the id element is defined as given below as a second format:

"providerName:[category:]question-ID"

In the second format, the term "providerName" indicates a name of the provider by which the question identified by the id element is set. It is to be noted that the term "category" and the term "question-ID" are similar to those in the first format.

In this manner, the questions defined as the PDI-Q are distinguished, depending upon the id element, into those questions independent of the provider which provides contents and common to providers and those questions defined uniquely by the provider which provides the content.

A question independent of the provider which provide a content and an answer to the question are hereinafter referred to suitably as provider common filtering parameter, and a question defined uniquely by the provider which provides a content and an answer to the question are hereinafter referred to suitably as provider unique filtering parameter.

As described above, since the provider common filtering parameter is defined commonly by providers without depending upon individual providers, generally the provider common filtering parameter is provided by a vender, that is, by a maker or the like, of the client **12**. Accordingly, although the PDI-Q generator **41** in the server **11** can be made so as to be provided by the provider side, it may otherwise be made so as to be provided by the vender of the client **12**.

It is to be noted that the syntax which configures the PDI-Q and the PDI-A is not limited to that of the example illustrated in FIG. **6**.

Example of the PDI-Q

Next, an example of the PDI-Q configured based on the syntax of FIG. **6** is described with reference to FIG. **7**.

In FIG. **7**, the term "transactional" in the first row is a value which indicates whether or not a recording/updating process is to be rolled back. In particular, when the questions, that is, the question group, defined by the PDI-Q are updated in the client **12** to which the questions are transmitted, all of the substance of the items of the PDI-Q may not be recorded/updated because of some accident such as disk writing error or interruption of a processing by increase of the processing load midway of processing for recording/updating the substance of the items of the PDI-Q into a storage region not shown of the client **12**. If all of the substance of the items of the PDI-Q is not recorded/updated, then the recording/updating process may be invalidated, that is, a rollback process may be carried out, going back to a state just before the recording/updating of the substance of the items of the PDI-Q. Thus, whether such rollback process should be carried out is represented by "transactional." In the case where "transactional" is "true," the PDI-Q is rolled back.

The second to fifth rows define a question for requesting a logic value type answer, and <id>Common:111</id> in the third row indicates an id element of the question and <q>Are you currently employed?</q> in the fourth row indicates the question itself.

The sixth to ninth rows define a question for requesting an integer value type answer, and <id>Common:222</id> in the seventh row indicates an id element of the question and <q>What is the age of the oldest member of the household who watches television?</q> in the eighth row indicates the question itself. It is to be noted that minInclusive="10"maxInclusive="100" in the sixth row indicates that an answer to the request is restricted to an integer value from 10 or more to 100 or less.

The tenth to 17th rows define a question for requesting an answer selection type answer, and <id>ProviderA:123</id> in the eleventh row indicates an id element of the question and <q>In which of the following sports are you most interested? (Multiple selection allowed)</q> indicates the question itself. Further, <a>Baseball in the 13th row, <a>Basketball in the 14th row, <a>Soccer in the 15th row and <a>Hockey in the 16th row individually indicate choices for an answer to the question. It is to be noted that minChoice="1" maxChoice="3" in the tenth row indicates that the number of answers to the question is restricted from one to three from among the choices.

The eighteenth to 24th rows define a question for requesting an answer selection type answer, and <id>ProviderA:ProgramX:123</id> in the 19th row indicates an id element of the question and <q>Do you enjoy camping and outdoor recreation? (Only one selection)</q> in the 20th row indicates the question itself. Further, <a>Never in the 21st row, <a>Occasionally in the 22nd row and <a>Frequently in the 23rd row individually indicate the choices of an answer to the question. It is to be noted that maxChoice="1" in the 18th row indicates that the number of answers to the question is restricted to one.

In this manner, in the PDI-Q, also candidates for the answer to the question and restriction conditions for the answer are defined depending upon the type of the question.

The 25th to 28th rows define a question for requesting a character column type answer, and <id>ProviderA:321</id> indicates an id element of the question in the 26th row and <q>Who's products are you most interested in recently?</q> in the 27th row indicates the question itself.

In the following description, the questions defined by the PDI-Q in FIG. **7** are referred to as questions of id elements. In particular, the question defined in the second to fifth rows is distinguished as a question of "Common:111" and the question defined in the sixth to ninth rows is distinguished as a question of "Common:222." Further, the question defined in the tenth to 17th rows is distinguished as a question of "ProviderA:123," and the question defined in the 18th to 24th rows is distinguished as a question of "ProviderA:ProgramX:123." Furthermore, the question defined in the 25th to 28th rows is distinguished as a question of "ProviderA:321."

At this time, the question of "Common:111" and the question of "Common:222" are distinguished as the provider common filtering parameter, and the question of "ProviderA:123," question of "ProviderA:ProgramX:123" and question of "ProviderA:321" are distinguished as the provider unique filtering parameter. For example, the question of "Common:111" indicates a question set commonly to providers and having the identifier "111," and the question of "ProviderA:ProgramX:123" indicates a question set by the provider of "ProviderA" and whose category or program ID is "ProgramX" and identifier is "123."

Referring back to the flow chart in FIG. **5**, at step S**12**, the PDI-Q generator **41** of the server **11** transmits the generated PDI-Q to the client **12** through the transmission section **42** and supplies the PDI-Q to the PDI-A generator **43**.

At step S**21**, the reception section **51** of the client **12** receives the PDI-Q transmitted from the server **11** and supplies the received PDI-Q to the PDI-A generator **52**.

It is to be noted that the PDI-Q is received by the client **12**, for example, every time broadcasting or transmission is carried out after a predetermined interval of time from the broadcasting station as the provider in which the server **11** is installed. Or, the PDI-Q may be received by the client **12** when the channel is set to that of the broadcasting station in which the server **11** is installed.

At step S**22**, the PDI-A generator **52** of the client **12** generates a PDI-A to the questions defined by the PDI-Q received by the reception section **51**. In particular, if the PDI-Q from

the server **11** is received, then the PDI-A generator **52** causes a display section not shown to display a screen image corresponding to each question defined by the PDI-Q and causes the user or viewer of the client **12** to input or select an answer to the question so that a PDI-A which indicates the answer to the question is generated. In particular, the PDI-A generator **52** interacts with the user to generate the PDI-A which indicates the answer to the question defined by the PDI-Q.

Example of the Screen Image Display in Communication with the User by the PDI-A Generator

Here, an example of screen image display in communication with the user by the PDI-A generator **52** is described with reference to FIGS. **8** to **12**. It is to be noted that it is assumed here that the client **12** receives the PDI-Q described with reference to FIG. **7**, and screen images corresponding to the question group defined by the received PDI-Q are successively displayed on the display section not shown of the client **12**.

FIG. **8** shows an example of screen image display corresponding to the question of "Common:111" from among the questions defined by the PDI-Q described hereinabove with reference to FIG. **7**. In FIG. **8**, the question of "Are you currently employed?" indicated in the fourth row in FIG. **7** is displayed in a question presentation region **61**. Further, the message of "choose one" for urging the user to input an answer to the question, a selection button **62-1** for urging the user to select "Yes" as the answer to the question and another selection button **62-2** for urging the user to select "No" as the answer to the question are displayed.

FIG. **9** shows an example of screen image display corresponding to the question of "Common:222" from among the questions defined by the PDI-Q described hereinabove with reference to FIG. **7**. In FIG. **9**, the question of "What is the age of the oldest member of the household who watches television?" indicated in the eighth row in FIG. **7** is displayed in a question presentation region **71**. Further, a message "enter age" for urging the user to input an answer to the question and an answer inputting region **72** for urging the user to input an integer value as the answer to the question are displayed.

FIG. **10** shows an example of screen image display corresponding to the question of "ProviderA:123" from among the questions defined by the PDI-Q described hereinabove with reference to FIG. **7**. In FIG. **10**, the question of "In which of the following sports are you most interested? (Multiple selection allowed)" indicated in the twelfth row in FIG. **7** is displayed in a question presentation region **81**. Further, the message of "choose one to three answers" for urging the user to input an answer to the question and selection buttons **82-1** to **82-4** for urging the user to select the choices of "Baseball," "Basketball," "Soccer" and "Hockey" as the answer to the question are displayed.

FIG. **11** shows an example of screen image display corresponding to the question of "ProviderA:ProgramX:123" from among the questions defined by the PDI-Q described hereinabove with reference to FIG. **7**. In FIG. **11**, the question of "Do you enjoy camping and outdoor recreation? (Only one selection)" indicated in the 20th row in FIG. **7** is displayed in a question presentation region **91**. Further, the message of "choose one" for urging the user to input an answer to the question and selection buttons **92-1** to **92-3** for urging the user to select the choices of "Never," "Occasionally" and "Frequently" as the answer to the question are displayed.

FIG. **12** shows an example of screen image display corresponding to the question of "ProviderA:321" from among the questions defined by the PDI-Q described with reference to FIG. **7**. In FIG. **12**, the question of "Who's products are you most interested in recently?" indicated in the 27th row in FIG. **7** is displayed in a question presentation region **101**. Further, the message of "write anything" for urging the user to input an answer to the question and an answer inputting region **102** for urging the user to input a character string as the answer to the question are displayed.

In this manner, the PDI-A generator **52** urges the user to input or select an answer to the questions defined by the PDI-Q in accordance with the screen image display described with reference to FIGS. **8** to **12** so that the PDI-A corresponding to the PDI-Q is generated.

It is to be noted that the screen image display described with reference to FIGS. **8** to **12** may be carried out just after the PDI-Q is received or may be carried out when, after the PDI-Q is received and retained into the storage section not shown, an instruction to display a setting screen image is issued by the user.

Example of the PDI-A

Here, an example of the PDI-A generated by the PDI-A generator **52** is described with reference to FIG. **13**. The PDI-A shown in FIG. **13** is generated based on selection or inputting of answers by the user to the screen image display described with reference to FIGS. **8** to **12**.

In particular, the second to fifth rows indicate an answer of the user to the question presented by the screen image display described hereinabove with reference to FIG. **8**. In particular, <id>Common:111</id> in the third row indicates an id element of the question presented by the screen image display described with reference to FIG. **8**, and <a>true in the fourth row indicates that the selection button **62-1** for the answer of "Yes" in the displaying screen image in FIG. **8** is selected as the answer to the question by the user.

The sixth to ninth rows indicate an answer of the user to the question presented by the screen image display described with reference to FIG. **9**. In particular, <id>Common:222</id> in the seventh row indicates an id element of the question presented by the screen image display in FIG. **9**, and <a>34 in the eighth row indicates that an integer value "34" is inputted as the answer to the question by the user to the answer inputting region **72** in the screen image display in FIG. **9**.

The tenth to 15th rows indicate an answer of the user to the question presented by the screen image display described hereinabove with reference to FIG. **10**. In particular, <id>ProviderA:123</id> in the eleventh row indicates an id element of the question presented by the screen image display in FIG. **10**, and <a>Baseball in the 12th row, <a>Soccer in the 13th row and <a>Hockey in the 14th row indicate that the selection buttons **82-1**, **82-3** and **82-4** are selected as the answer to the question by the user in the screen display in FIG. **10**, respectively.

The 16th to 19th rows indicate an answer of the user to the question presented by the screen image display described hereinabove with reference to FIG. **11**. In particular, <id>ProviderA:ProgramX:123</id> in the 17th row indicates an id element of the question presented by the screen image display in FIG. **11**, and <a>Occasionally in the 18th row indicates that the selection button **92-2** is selected as the answer to the question by the user in the screen image display in FIG. **11**.

The 20th to 23rd rows indicate an answer of the user to the question presented by the screen image display described hereinabove with reference to FIG. **12**. In particular, <id>ProviderA:321</id> on the 21st row indicates the id element of the question presented by the screen image display of FIG. **12**. Meanwhile, <a>Somy on the 22nd row indicates that "Somy" is inputted as a character string to the

answer inputting region **102** on the screen image display of FIG. **12** by the user as an answer to the question.

The PDI-A generator **52** supplies the PDI-A generated in this manner to the PDI-A storage section **53** so as to be stored. The PDI-A stored in the PDI-A storage section **53** is used when the content distributed from the server **11** conforms to the liking of the user of the client **12** as hereinafter described.

Referring back to the flow chart of FIG. **5**, at step S**13**, the PDI-A generator **43** of the server **11** generates a PDI-A to the questions defined in the PDI-Q from the PDI-Q generator **41** and supplies the generated PDI-A to the metadata distributor **44**. More particularly, if a PDI-Q is generated by an operation of the staff of the broadcasting station or provider side, then the PDI-A generator **43** causes the display section not shown to display such screen images which correspond to the questions defined in the PDI-Q as described hereinabove with reference to FIGS. **8** to **12**. Then, the PDI-A generator **43** causes the staff of the broadcasting station to input or select answers to the questions to generate a PDI-A representative of the answers. At this time, the staff of the broadcasting station would input or select answers corresponding to the content to be distributed as answers to the questions defined in the PDI-Q. In other words, the PDI-A generated by the PDI-A generator **43** represents information, that is, answers, generated by the provider side taking the liking of the user or viewer of the client **12** into consideration, for allowing the viewer to enjoy a content to be distributed later.

At step S**14**, the metadata distributor **44** specifies or refers to a content corresponding to the PDI-A from among the contents accumulated in the content accumulation section **45** based on the PDI-A from the PDI-A generator **43**. The content specified here may be a content with regard to which the similarity between the PDI-A from the PDI-A generator **43** and the content metadata applied in advance to the accumulated content is higher than a predetermined value or may be a content selected in advance as a content desirable to be viewed by the user by the staff of the broadcasting station. It is to be noted that the content specified by the metadata distributor **44** is acquired from the content accumulation section **45** by the content distributor **46**.

At step S**15**, the metadata distributor **44** newly generates, based on the content metadata applied in advance to the content specified at step S**15** and the PDI-A from the PDI-A generator **43**, content metadata including the PDI-A.

At step S**16**, the transmission section **42** distributes the content acquired by the content distributor **46** together with the content metadata generated by the metadata distributor **44**. At this time, as the content metadata, content metadata prescribed by a standardization organization may be transmitted in addition to the content metadata generated by the metadata distributor **44**.

In this manner, a content whose content metadata includes a PDI-A representative of answers intended by the provider side as the answers to the questions defined in the PDI-Q, or in other words, a content which conforms to the liking of the user and whose viewing is expected by the provider side, is distributed.

It is to be noted that the processes at steps S**13** to S**16** need not be executed immediately after the process at step S**12**, but may be executed before a PDI-A is generated and stored in the client **12** owned by each user.

Further, while, at step S**16**, the content is distributed together with the content metadata, the content may not be distributed together with the content metadata, but after the content metadata including the PDI-A is transmitted in advance to the client **12**, the content corresponding to the content metadata may be distributed.

After the content and the content metadata are distributed from the server **11** in this manner, at step S**23**, the reception section **51** of the client **12** receives the content and the content metadata distributed from the server **11** and supplies them to the content filter **54**.

At step S**24**, the content filter **54** carries out matching between the PDI-A stored in the PDI-A storage section **53** and the PDI-A included in the content metadata from the server **11**. It is to be noted that, in order to distinguish the PDI-A stored in the PDI-A storage section **53** and the PDI-A included in the content metadata from the server **11** from each other, the former is hereinafter referred to as user side PDI-A and the latter is hereinafter referred to as provider side PDI-A.

Example of the Matching Process by the Content Filter

Here, it is assumed that the PDI-A described hereinabove with reference to FIG. **13** is generated and stored as the user side PDI-A and the PDI-A illustrated in FIG. **14** is transmitted as the provider side PDI-A from the server **11**.

The provider side PDI-A illustrated in FIG. **14** has a basically similar configuration to that of the user side PDI-A illustrated in FIG. **13**, and therefore, overlapping description of the provider side PDI-A is omitted herein to avoid redundancy. However, the provider side PDI-A illustrated in FIG. **14** indicates that "false" is selected as an answer to the question of "Common:111" and "Baseball" is selected as an answer to the question of "ProviderA:123" and besides "Never" is selected as an answer to the question of "ProviderA:ProgramX:123."

At this time, the content filter **54** compares the user side PDI-A and the provider side PDI-A with each other. Then, if the user side PDI-A and the provider side PDI-A exhibit coincidence with regard the answers to at least one question, then the content filter **54** decides that the user side PDI-A and the provider side PDI-A match with each other. However, if the user side PDI-A and the provider side PDI-A exhibit no coincidence with regard to the answers to any question, then the content filter **54** decides that the user side PDI-A and the provider side PDI-A do not match with each other. In the present case, the answer to the question of "ProviderA:123" in the user side PDI-A illustrated in FIG. **13** and the answer to the question of "ProviderA:123" in the provider side PDI-A illustrated in FIG. **14** coincide with each other in that both of them include "Baseball." Therefore, it is decided that the user side PDI-A and the provider side PDI-A match with each other.

Then, it is assumed that a PDI-A illustrated in FIG. **15** is transmitted as the provider side PDI-A from the server **11**.

The provider side PDI-A illustrated in FIG. **15** indicates that "Basketball" is selected as an answer to the question of "ProviderA:123" and "Never" is selected as an answer to the question of "ProviderA:123."

In this instance, since the answers to the questions in the user side PDI-A illustrated in FIG. **13** and the answers to the questions in the provider side PDI-A illustrated in FIG. **15** do not coincide with each other at all, it is decided that the user side PDI-A and the provider side PDI-A do not match with each other.

The content filter **54** carries out the matching process between the user side PDI-A and the provider side PDI-A in this manner.

At step S**25**, the content filter **54** decides whether or not the user side PDI-A and the provider side PDI-A match with each other. If it is decided at step S**25** that the user side PDI-A and the provider side PDI-A match with each other, then the content filter **54** decides that the content distributed from the server **11** conforms to the liking of the user or viewer of the client **12**. Thus, the content filter **54** supplies the content to the

content reproduction section **55** or the content accumulation section **56**, and then the processing advances to step S**26**.

If the content distributed from the server **11** is supplied from the content filter **54** to the content reproduction section **55**, then the content reproduction section **55** reproduces the content at step S**26**. On the other hand, if the content distributed from the server **11** is supplied from the content filter **54** to the content accumulation section **56**, then the content accumulation section **56** accumulates or records the content at step S**26**. The accumulated content is suitably supplied to and reproduced by the content reproduction section **55** in response to an operation instruction of the user.

On the other hand, if it is decided at step S**25** that the user side PDI-A and the provider side PDI-A do not match with each other, then the content filter **54** decides that the content distributed from the server **11** does not conform to the liking of the user or viewer of the client **12**. Then, the content filter **54** abandons or deletes the content, and the processing is ended.

According to the process described above, in the broadcasting system, on the provider side, the server generates a PDI-Q representative of questions regarding the liking of the user, and the PDI-Q is transmitted to the client terminal. Further, a provider side PDI-A representative of answers set by the provider side to the PDI-Q is distributed as metadata of the corresponding content. Consequently, as content metadata, content metadata in accordance with needs at the time other than content metadata prescribed by a standardization organization can be applied to a content. On the other hand, on the user side, the client terminal generates a user side PDI-A representative of answers of the user to the PDI-Q from the server. Then, matching between the generated user side PDI-A and the provider side PDI-A from the server is carried out to determine whether or not the content distributed from the server should be acquired. Consequently, a content can be filtered with content metadata which satisfies needs at the time other than content metadata prescribed by a standardization organization. Accordingly, a content which satisfies current needs can be acquired.

It is to be noted that, while, in the foregoing description, the client **12** carries out matching between the PDI-As on the real time basis upon distribution of a content from the server **11**, all contents may be accumulated upon distribution of such contents from the server **11**. In this instance, matching between the PDI-As may be carried out on the background of the processing such that a content corresponding to a matched PDI-A, that is, a matched provider side PDI-A, from among the accumulated contents is reproduced or a content which corresponds to any PDI-A which does not match is deleted.

Further, in the foregoing description, the content filter **54** compares a user side PDI-A and a provider side PDI-A represented as instances, and matching between the user side PDI-A and the provider side PDI-A is carried out depending upon whether or not answers to at least one question coincide with each other. However, the user side PDI-A and the provider side PDI-A may be compared with each other by representing one of the user side PDI-A and the provider side PDI-A as a query for evaluating the PDI-A.

In the following, a configuration for comparing a user side PDI-A and a provider side PDI-A with each other by representing one of the user side PDI-A and the provider side PDI-A as a query is described.

Example 1 of the Matching Process by an Query for Evaluating a PDI-A

First, a configuration for representing a provider side PDI-A as a query and comparing a user side PDI-A and the provider side PDI-A with each other is described.

FIG. **16** shows an example of a functional configuration of the server **11** which represents a provider side PDI-A as a query.

Referring to FIG. **16**, the server **11** shown includes a PDI-Q generator **41**, a transmission section **42**, a content accumulation section **45**, a content distributor **46**, a PDI-A query generator **111** and a metadata distributor **112**.

It is to be noted that, in the server **11** of FIG. **16**, like elements having like functions to those of the elements provided in the server **11** of FIG. **3** are denoted by like terms and like reference characters and overlapping description of them is suitably omitted herein to avoid redundancy.

In particular, the server **11** of FIG. **16** is different from the server **11** of FIG. **3** in that it includes the PDI-A query generator **111** and the metadata distributor **112** in place of the PDI-A generator **43** and the metadata distributor **44**.

The PDI-A query generator **111** generates, based on a PDI-Q from the PDI-Q generator **41**, a PDI-A corresponding to the PDI-Q, that is, a provider side PDI-A, applies the generated provider side PDI-A to a predetermined conditional statement to generate a PDI-A query and supplies the PDI-A query to the metadata distributor **112**.

The metadata distributor **112** specifies or refers to, based on the PDI-A query from the PDI-A query generator **111**, a content corresponding to the PDI-A query from among contents accumulated in the content accumulation section **45**. The metadata distributor **112** generates content metadata including the PDI-A query as content metadata of the specified content and transmits the generated content metadata to the client **12** through the transmission section **42**.

In the client **12** in the present example, the content filter **54** shown in FIG. **4** reads out a PDI-A, that is, a user side PDI-A, from the PDI-A storage section **53**, and filters the content based on the read out user side PDI-A and the PDI-A query included in the content metadata transmitted from the server **11** to the client **12**. Except this, the client **12** is same as the client **12** of FIG. **4**, and therefore, overlapping description of the same is omitted herein to avoid redundancy.

Now, content transmission and reception processes of the broadcasting system **10** which includes the server **11** of FIG. **16** are described with reference to a flow chart of FIG. **17**.

It is to be noted that processes at steps S**31**, S**32**, S**36**, S**41** to S**43**, S**45** and S**46** of the flow chart of FIG. **17** are basically similar to the processes at steps S**11**, S**12**, S**16**, S**21** to S**23**, S**25** and S**26** of the flow chart of FIG. **5**, respectively. Therefore, overlapping description of them is omitted herein to avoid redundancy.

In particular, at step S**33**, the PDI-A query generator **111** of the server **11** generates a provider side PDI-A to questions defined by the PDI-Q from the PDI-Q generator **41** and applies the generated provider side PDI-A to a predetermined conditional statement to generate a PDI-A query. Then, the PDI-A query generator **111** supplies the generated PDI-A query to the metadata distributor **112**. In particular, for example, if a PDI-Q is generated by an operation of staff of a broadcasting station, that is, the provider side, then the PDI-A query generator **111** causes the display section not shown to successively display such screen images corresponding to the questions defined by the PDI-Q as described hereinabove with reference to FIGS. **8** to **12**. Then, the PDI-A query generator **111** causes the staff of the broadcasting station to input or select answers to the questions and causes the staff to determine a combination of the answers, that is, a filtering condition, to generate a PDI-A query representative of the combination of the answers. At this time, the staff of the broadcasting station would input or select answers corresponding to a content to be distributed as answers to the

questions defined in the PDI-Q and then determine a combination of the answers. In other words, the PDI-A query generated by the PDI-A query generator **111** represents information, that is, a combination of answers, generated by the provider side taking a liking of a user or viewer of the client **12** into consideration, for allowing the viewer to enjoy a content to be distributed later.

At step S**34**, the metadata distributor **112** specifies or refers to, based on the PDI-A query from the PDI-A query generator **111**, a content corresponding to the PDI-A query from among the contents accumulated in the content accumulation section **45**. The content specified here may be a content with regard to which the similarity between the PDI-A query from the PDI-A query generator **111** and the content metadata applied in advance to the accumulated content is higher than a predetermined value or may be a content selected in advance as a content desirable to be enjoyed by the user by the staff of the broadcasting station. It is to be noted that the content specified by the metadata distributor **112** is acquired from the content accumulation section **45** by the content distributor **46**.

At step S**35**, the metadata distributor **112** newly generates, based on the content metadata applied in advance to the content specified at step S**34** and the PDI-A query from the PDI-A query generator **111**, content metadata including the PDI-A query.

Then, at step S**44**, the content filter **54** of the client **12** carries out matching of the PDI-A stored in the PDI-A storage section **53** based on the PDI-A query included in the content metadata from the server **11**.

Here, it is assumed that the PDI-A described hereinabove with reference to FIG. **13** is generated and stored as the user side PDI-A and a PDI-A query indicated below has been transmitted from the server **11**.

"//QBA[id='Common:111' and a='true'] and //QSA [id='ProviderA:123' and a='Baseball']"

The PDI-A query given above indicates that the user side PDI-A evaluates whether "true" is selected as the answer to the question of "Common:111" and "Baseball" is selected as an answer to the question of "ProviderA:123."

At this time, the content filter **54** evaluates the user side PDI-A based on the PDI-A query. Then, if the user side PDI-A satisfies the PDI-A query, that is, is true, then the content filter **54** decides that the user side PDI-A and the PDI-A query match with each other, but if the PDI-A query is not satisfied, that is, is false, then the content filter **54** decides that the user side PDI-A and the PDI-A query do not match with each other. In this instance, in the user side PDI-A illustrated in FIG. **13**, since "true" is selected as an answer to the question of "Common:111" and besides "Baseball" is selected as an answer to the question of "ProviderA:123," it is decided that the user side PDI-A and the PDI-A query match with each other.

Since a more complicated filtering condition is represented by a PDI-A query set by the provider side in this manner, the provider side can allow a user or viewer who is expected to view a content by the provider to acquire a content.

Example 2 of the Matching Process by a Query for Evaluating a PDI-A

Now, a configuration which represents a user side PDI-A as a query to compare the user side PDI-A and a provider side PDI-A with each other is described.

FIG. **18** shows an example of a functional configuration of the client **12** which represents a user side PDI-A as a query.

The client **12** of FIG. **18** includes a reception section **51**, a content filter **54**, a content reproduction section **55**, a content accumulation section **56**, a PDI-A query generator **131**, and a PDI-A query storage section **132**.

It is to be noted that, in the client **12** of FIG. **18**, like elements having like functions to those of the elements provided in the client **12** of FIG. **4** are denoted by like terms and like reference characters and overlapping description of them is suitably omitted herein to avoid redundancy.

In particular, the client **12** of FIG. **18** is different from the client **12** of FIG. **4** in that it includes the PDI-A query generator **131** and the PDI-A query storage section **132** in place of the PDI-A generator **52** and the PDI-A storage section **53**.

The PDI-A query generator **131** generates, based on a PDI-Q transmitted thereto from the server **11**, a PDI-A, that is, a user side PDI-A, corresponding to the PDI-Q and representative of answers of a user to questions about the liking of the user of the client **12**. Then, the PDI-A query generator **131** applies the generated user side PDI-A to a predetermined conditional statement to generate a PDI-A query and supplies the generated PDI-A query to the PDI-A query storage section **132**.

The PDI-A query storage section **132** stores the PDI-A query from the PDI-A query generator **131**. The PDI-A query stored in the PDI-A query storage section **132** is read out suitably into the content filter **54**.

It is to be noted that the content filter **54** of FIG. **18** reads out the PDI-A query from the PDI-A storage section **53** and filters the content based on the read out PDI-A query and the provider side PDI-A included in the content metadata transmitted thereto from the server **11**.

The server **11** in the present example is same as the server **11** shown in FIG. **3**, and therefore, overlapping description thereof is omitted herein to avoid redundancy.

Now, content transmission and reception processes of the broadcasting system **10** which includes the client **12** of FIG. **18** are described with reference to a flow chart of FIG. **19**.

It is to be noted that processes at steps S**51** to S**61**, S**63**, S**65** and S**66** of the flow chart of FIG. **19** are basically similar to the processes at steps S**11** to S**21**, S**23**, S**25** and S**26**, respectively, and therefore, overlapping description of them is omitted herein to avoid redundancy.

In particular, at step S**62**, the PDI-A query generator **131** of the client **12** generates a user side PDI-A to questions defined in a PDI-Q received by the reception section **51** and applies the generated user side PDI-A to a predetermined conditional statement to generate a PDI-A query. In particular, for example, when a PDI-Q is received from a broadcasting station, the PDI-A query generator **131** causes the display section not shown to display such screen images which correspond to the question defined in the PDI-Q as described hereinabove with reference to FIGS. **8** to **12**. Then, the PDI-A query generator **131** causes the user or viewer of the client **12** to input or select answers to the questions and causes the user to determine a combination or filtering condition of the answers to generate a PDI-A query representative of the combination of the answers. In other words, the PDI-A query generator **131** interacts with the user to generate a PDI-A query representative of the combination of answers to the questions defined by the PDI-Q.

Then at step S**64**, the content filter **54** carries out matching of the provider side PDI-A included in the content metadata from the server **11** based on the PDI-A query stored in the PDI-A query storage section **132**.

Here, it is assumed that the PDI-A described hereinabove with reference to FIG. **14** is transmitted as the provider side PDI-A from the server **11** and a PDI-A query given below is generated and stored.

"//QBA[id='Common:111' and a='false'] and //QSA [id='ProviderA:123' and a='Baseball']"

The PDI-A query given above indicates that the provider side PDI-A evaluates whether "false" is selected as the answer to the question of "Common:111" and "Baseball" is selected as an answer to the question of "ProviderA:123."

At this time, the content filter **54** evaluates the provider side PDI-A based on the PDI-A query. Then, if the provider side PDI-A satisfies the PDI-A query, that is, is true, then the content filter **54** decides that the provider side PDI-A and the PDI-A query match with each other, but if the PDI-A query is not satisfied, that is, is false, then the content filter **54** decides that the provider side PDI-A and the PDI-A query do not match with each other. In this instance, in the provider side PDI-A illustrated in FIG. **14**, since "false" is selected as an answer to the question of "Common:111" and besides "Baseball" is selected as an answer to the question of "ProviderA:123," it is decided that the provider side PDI-A and the PDI-A query match with each other.

Since a more complicated filtering condition is represented by a PDI-A query set by the user side in this manner, it is possible to allow the user side to acquire a content expected thereby with a higher degree of certainty.

Incidentally, although the present invention can be applied to a broadcasting system which broadcasts a digital television program, as an example, the present invention can be applied to a broadcasting system which broadcasts in accordance with the ATSC-M/H (Mobile/Handheld) method which is an expanded method of the ATSC (Advanced Television Standard Committee) method to mobile communication.

Application Example to a Broadcasting System Which Broadcasts by the ATSC-M/H Method

FIG. **20** shows an example of a configuration of a broadcasting system which broadcasts digital television programs of the ATSC method and the ATSC-M/H method in related arts.

The broadcasting system of FIG. **20** corresponds to the server **11** of the broadcasting system **10** of FIG. **1** and includes an ATSC Legacy System **151**, an ATSC M/H System **152**, an M/H Framing **153** and an RF/Transmission System **154**.

The ATSC Legacy System **151** signals a broadcasting stream in the form of an MPEG2-TS (Moving Picture Experts Group 2 Transport Stream) in accordance with the ATSC method in related arts. The ATSC M/H System **152** signals a broadcasting stream of IP packets in accordance with the ATSC-M/H method. Control Data **152***a* of the ATSC M/H System **152** is control information regarding a broadcasting stream (A/V (Audio/Video) content) to be signaled from the ATSC M/H System **152**.

Broadcasting streams described above are multiplexed by the M/H Framing **153** and transmitted as a carrier by the RF/Transmission System **154**. It is to be noted that description of details of functions of the blocks mentioned is omitted herein because they are described in the ATSC standards.

FIG. **21** illustrates a protocol stack of a signal of a broadcasting wave transmitted in accordance with the ATSC-M/H method.

Although detailed description is omitted, one of the highest hierarchies is "Service Guide" and prescribes metadata of a content to be provided in accordance with the ATSC-M/H method. The Control Data **152***a* illustrated in FIG. **20** is transmitted as content metadata (hereinafter referred to merely as Service Guide) prescribed by "Service Guide." In particular, in the broadcasting system of FIG. **20**, a PDI-A, that is, a provider side PDI-A, a PDI-A query or a PDI-Q transmitted from the server **11** to the client **12** in the broadcasting system **10** described hereinabove is placed in and transmitted together with the Service Guide.

It is to be noted that a lower hierarchy "FLUTE" adjacent to the "Service Guide" and a lower hierarchy "ALC" adjacent to the "FLUTE" are hierarchies for transferring the Service Guide packetized in accordance with the UDP/IP (User Datagram Protocol/Internet Protocol).

As specifications of the Service Guide, a data configuration illustrated in FIG. **22** is prescribed by the OMA (Open Mobile Alliance). It is to be noted that description of details of the configuration of the Service Guide illustrated in FIG. **22** is omitted herein because it is prescribed in "'Service Guide for Mobile Broadcast Services,' Open Mobile Alliance, OMA-TSBCAST_ServiceGuide-V1_0, Candidate Version 1.0."

The PDI-A, that is, the provider side PDI-A, or the PDI-A query, is placed into at least one of a "Service" fragment, a "Schedule" fragment and a "Content" fragment among components of the Service Guide illustrated in FIG. **22**.

The "Service" fragment is metadata including control information regarding the substance of a channel service, and FIG. **23** illustrates details of a configuration of the "Service" fragment. A PDI-A or a PDI-A query is placed into a "PrivateExt" element prescribed on the lowest stage of the "Service" fragment illustrated in FIG. **23** by newly adding a "PDI-A" element to the "PrivateExt" element. More particularly, for example, the "PDI-A" element is represented by a character string as <xs:element name="PDI-A" type="xs:string" xmlns:xs="http://www.w3.org/2001/XMLschema"/> in accordance with the XML schema and is then encoded.

The "Schedule" fragment is metadata including control information regarding a distribution schedule of a content, that is, a digital television program, and FIG. **24** illustrates details of a configuration of the "Schedule" fragment. A PDI-A or a PDI-A query is placed into a "PrivateExt" element prescribed on the lowest stage of the "Schedule" fragment illustrated in FIG. **24** by newly adding a "PDI-A" element to the "PrivateExt" element. More particularly, for example, the "PDI-A" element is represented by a character string as <xs:element name="PDI-A" type="xs:string" xmlns:xs="http://www.w3.org/2001/XMLschema"/> in accordance with the XML schema and is then encoded.

The "Content" fragment is metadata including control information regarding the substance of a content, that is, a digital television program, and FIG. **25** illustrates details of a configuration of the "Content" fragment. A PDI-A or a PDI-A query is placed into a "PrivateExt" element prescribed on the lowest stage of the "Content" fragment illustrated in FIG. **25** by newly adding a "PDI-A" element to the "PrivateExt" element. More particularly, for example, the "PDI-A" element is represented by a character string as <xs:element name="PDI-A" type="xs:string" xmlns:xs="http://www.w3.org/2001/XMLschema"/> in accordance with the XML schema and is then encoded.

Meanwhile, the PDI-Q is placed into "Interactivity Data" from among the components of the Service Guide illustrated in FIG. **22**.

The "Interactivity Data" fragment is metadata regarding an application regarding a channel service or a content, that is, a digital television program, and FIG. **26** illustrates details of a configuration of the "Interactivity Data" fragment. A PDI-Q is placed into a "PrivateExt" element prescribed on the lowest stage of the "Interactivity Data" fragment illustrated in FIG. **26** by newly adding a "PDI-Q" element to the "PrivateExt" element. More particularly, the "PDI-Q" element is represented by a character string as <xs:element name="PDI-Q" type="xs:string" xmlns:xs="http://www.w3.org/2001/XMLschema"/> in accordance with the XML schema and is then encoded.

While the foregoing description relates to an example wherein the present invention is applied to a broadcasting system which broadcasts in accordance with the ATSC-M/H method, the present invention can be applied also to a broadcasting system which carries out NRT (Non-Real Time) broadcasting in accordance with the ATSC system in related arts. Since the NRT broadcasting does not assume viewing of a content on the real time basis, there is no necessity to reproduce a content in synchronism with the broadcasting time of the content broadcast as data in the form of a broadcasting signal.

Application Example to a Broadcasting System which Carries Out NRT Broadcasting

FIG. **27** illustrates a protocol stack of a signal of a broadcasting wave transmitted by NRT broadcasting.

Although detailed description is omitted, the lowermost layer is "Physical Layer" and corresponds to a frequency band of a broadcasting wave. An upper layer adjacent to the "Physical Layer" is "MPEG2-TS" and corresponds to a broadcasting stream broadcast as a broadcasting wave.

"ATSC-PSIP (Program and System Information Protocol)" and "MPEG2-PSI (Program Specific Information)" are illustrated as higher layers adjacent to "MPEG2-TS." "ATSC-PSIP" is a layer having TVCT, and "MPEG2-PSI" is a layer having PAT (Program Association Table) and PMT (Program Map Table).

Meanwhile, "DSM-CC (Digital Storage Media Command and Control) Addressable Section" is indicated as an upper layer adjacent to "MPEG2-TS." "DSM-CC Addressable Section" is used as an adaptation layer for transferring an IP packet on MPEG2-TS of a broadcasting stream.

FIG. **28** illustrates a data structure of TVCT, PAT, PMT and DSM-CC Addressable Section. In TVCT, control information regarding a broadcasting stream to be broadcast by MPEG2-TS is described, and an MPEG2-TS by which DSM-CC Addressable Section for transferring an IP packet stream (UDP/IP Packet) is specified based on TVCT.

Referring back to FIG. **27**, "IP" is indicated as an upper layer adjacent to "DSM-CC Addressable Section," and "UDP" is indicated as a further higher layer adjacent to "IP."

"Service Signaling Channel" and "FLUTE/ALC (File Delivery over Unidirectional Transport/Asynchronous Layered Coding Protocol)" are indicated as higher layers adjacent to "UDP." "Service Signaling Channel" is a layer having SMT (Service Map Table) and NRT-IT (NRT Information Table). "FLUTE Session" is indicated as a higher layer adjacent to "FLUTE/ALC." "FLUTE Session" is a layer having FLUTE-FDT (File Delivery Table) and A/V File.

FIG. **29** illustrates a data structure of SMT, NRT-IT and FLUTE FDT. SMT describes metadata regarding a channel, and NRT-IT described metadata regarding a content. SMT and NRT-IT are transferred by "Service Signaling Channel" described hereinabove. FLUTE FDT describes information for identifying A/V files. It is to be noted that an A/V file is transferred by "FLUTE/ALC."

Here, in a broadcasting system which carries out NRT broadcasting, a PDI-A, that is, a provider side PDI-A, a PDI-A query or a PDI-Q to be transmitted from the server **11** to the client **12** in the broadcasting system **10** described hereinabove is placed into and transmitted together with SMT or NRT-IT.

In particular, in the case where filtering of a content to be distributed is carried out in a unit of a channel or broadcasting station, "PDI descriptor" into which the PDI-A, PDI-A query or PDI-Q is to be placed is prescribed newly in the descriptor loop ("Service #**1**" in FIG. **29**) of the service level of SMT.

On the other hand, in the case where filtering of a content to be distributed is carried out in a unit of a content, "PDI descriptor" into which the PDI-A, PDI-A query or PDI-Q is to be placed is prescribed newly in the descriptor loop ("Content #**1**" in FIG. **29**) of the service level of NRT-IT.

FIG. **30** illustrates an example of the syntax of "PDI descriptor." In FIG. **30**, each of descriptors to be described is defined together with a bit number (No. of Bits) and a format (Format).

According to the syntax illustrated in FIG. **30**, a PDI-A, a PDI-A query or a PDI-Q is described in a descriptor of variable bits, that is, in "PDI_Q or PDI_A or PDI_A_Query."

It is to be noted that the syntax of "PDI descriptor" is not limited to the example illustrated in FIG. **30**.

In this manner, the present invention can be applied also to a broadcasting system which carries out NRT broadcasting.

It is to be noted that naturally the present invention may be applied also to a broadcasting system which broadcasts in accordance with the ATSC-M/H method described hereinabove and a broadcasting system which carries out NRT broadcasting in accordance with a method other than an existing broadcasting system.

Incidentally, in the broadcasting system **10** described above, the client **12** interacts with a user through screen image display corresponding to questions defined in a PDI-Q from the server **11** to generate user side PDI-A. If questions set or generated on the provider side have simple substance, then the client **12** can interact with the user through the screen image display described hereinabove with reference to FIGS. **8** to **12**. However, a question set by the provider side has the substance which requires high interactivity such as, for example, the substance which involves complicated conditional branching by selection of the user, there is the possibility that sufficient interaction with the user may not be carried out with such screen image display as described hereinabove with reference to FIGS. **8** to **12**. In such a case, since a PDI-A which reflects the liking of the user with a high degree of accuracy cannot be generated, an accurate filtering condition cannot be obtained. As a result, a content which satisfies needs in this instance cannot be acquired.

Therefore, in the following, embodiments regarding a broadcasting system which can sufficiently carry out interaction with a user even if a question set by the provider side has the substance which requires a high degree of interactivity are described.

2. Second Embodiment

Example of the Functional Configuration of the Server

First, an example of a functional configuration of the server **11** in the broadcasting system **10** which executes a script to carry out an interaction with a user is described with reference to FIG. **31**.

The server **11** of FIG. **31** includes a transmission section **42**, a metadata distributor **44**, a content accumulation section **45**, a content distributor **46**, a PDI-S generator **311** and a PDI-S execution section **312**.

It is to be noted that, in the server **11** of FIG. **31**, like elements having like functions to those of the elements provided in the server **11** of FIG. **3** are denoted by like terms and like reference characters and overlapping description of them is suitably omitted herein to avoid redundancy.

In particular, the server **11** of FIG. **31** is different from the server **11** of FIG. **3** in that it includes the PDI-S generator **311**

and the PDI-S execution section **312** in place of the PDI-Q generator **41** and the PDI-A generator **43**.

The PDI-S generator **311** generates a PDI-S (Preference Demographic and Interest-Script) which is a script for obtaining a user side PDI-A representative of answers of a user or viewer of the client **12** to questions regarding the liking of the user. Then, the PDI-S generator **311** transmits the generated PDI-S to the client **12** through the transmission section **42** and supplies the PDI-S to the PDI-S execution section **312**. The PDI-S includes a Web browser, other applications and so forth.

The PDI-S execution section **312** executes the PDI-S from the PDI-S generator **311** to generate a provider side PDI-A representative of an answer set by the provider side to the questions regarding the liking of the user of the client **12**, and supplies the generated provider side PDI-A to the metadata distributor **44**.

Example of the Functional Configuration of the Client

Now, an example of a functional configuration of the client **12** in the broadcasting system **10** wherein a script is executed to carry out an interaction with the user is described with reference to FIG. **32**.

The client **12** of FIG. **32** includes a reception section **51**, a PDI-A storage section **53**, a content filter **54**, a content reproduction section **55**, a content accumulation section **56**, a PDI-S execution section **321** and a log information storage section **322**.

It is to be noted that, in the client **12** of FIG. **32**, like elements having like functions to those of the elements provided in the client **12** of FIG. **4** are denoted by like terms and like reference characters and overlapping description of them is suitably omitted herein to avoid redundancy.

In particular, the client **12** of FIG. **32** is different from the client **12** of FIG. **4** in that the PDI-S execution section **321** is provided in place of the PDI-A generator **52** and the log information storage section **322** is provided newly.

The PDI-S execution section **321** executes the PDI-S transmitted from the server **11** to generate a user side PDI-A representative of answers of the user to questions regarding the liking of the user of the client **12**, and supplies the generated user side PDI-A to the PDI-A storage section **53**. The PDI-S execution section **321** executes the PDI-S based on log information hereinafter described as occasion demands.

The log information storage section **322** has stored therein log information representative of a behavior log of the user who owns the client **12**. The log information stored in the log information storage section **322** is read out to the PDI-S execution section **321** as occasion demands.

Example of the Content Transmission and Reception Processes

Content transmission and reception processes of the broadcasting system **10** configured from the server **11** of FIG. **31** and the client **12** of FIG. **32** are described below with reference to a flow chart of FIG. **33**.

It is to be noted that processes at steps S**114** to S**116** and S**123** to S**126** of the flow chart of FIG. **33** are basically similar to the processes at steps S**14** to S**16** and S**23** to S**26** of the flow chart of FIG. **5**, respectively, and therefore, overlapping description of them is omitted herein to avoid redundancy.

In particular, if, on the provider side such as a broadcasting company, for example, a sponsor of a content to be broadcast or distributed or the broadcasting company itself issues a request for distribution of a content to viewers having a particular liking or attribute, then the PDI-S generator **311** generates a PDI-S at step S**111**. In particular, the PDI-S generator **311** generates, in response to an operation of staff on the provider side, a PDI-S to the user of the client **12** for obtaining a user side PDI-A representative of answers of the user to the questions regarding what liking or attribute the user has.

Another Example of the Syntax of the XML Schema

Here, another example of the syntax of the XML schema for configuring a PDI-S and a PDI-A in the present embodiment is described with reference to FIG. **34**.

It is to be noted that the first to 44th rows of the syntax illustrated in FIG. **34** are same as the first to 44th rows of the syntax illustrated in FIG. **6**, and therefore, overlapping description of them is omitted herein to avoid redundancy.

The 45th to 50th rows represent a declaration of elements of a question defined by the name of "QAA" from among the questions declared in the fifth to ninth rows, that is, by a question whose type is "AnyAnswerType." The id element indicated in the 47th row represents an ID for identifying the item of the question, and the format thereof is defined by a format "providerName:[category:]question-ID" similar to that of the provider unique filtering parameter.

In particular, a question defined by the name of "QAA," that is, a question whose type is "AnyAnswerType," and an answer to the question, are classified into the provider unique filtering parameter. It is to be noted that, since the question defined by the name of "QAA" does not limit the type of the answer, the question, that is, the q element, is not defined in the 45th to 50th rows.

Further, the answer to the question defined by the name of "QAA," that is, the a element, can have a format whose substance can be grasped only by the provider who sets the question as hereinafter described and therefore is hereinafter referred to as provider unique filtering parameter of the provider hiding format.

Referring back to the flow chart of FIG. **33**, at step S**112**, the PDI-S generator **311** of the server **11** transmits the generated PDI-S to the client **12** through the transmission section **42** and supplies the PDI-S to the PDI-S execution section **312**.

At step S**121**, the reception section **51** of the client **12** receives the PDI-S transmitted from the server **11** and supplies the received PDI-S to the PDI-S execution section **321**.

It is to be noted that the PDI-S may be received by the client **12**, for example, every time it is broadcast or transmitted after a predetermined interval of time from a broadcasting station as the provider in which the server **11** is installed. Or, the PDI-S may be received by the client **12** when the client **12** adjusts the channel to the broadcasting station in which the server **11** is installed.

At step S**122**, the PDI-S execution section **321** of the client **12** carries out a PDI-S execution process to generate a user side PDI-A.

Example of the PDI-S Execution Process

Here, details of the PDI-S execution process by the PDI-S execution section **321** are described with reference to FIG. **35**. After the PDI-S execution process is started, the PDI-S execution section **321** causes the display section not shown to display a screen image corresponding to a question defined in the PDI-S. Then, the PDI-S execution section **321** causes the user to select whether a user side PDI-A representative of an answer to the question is to be automatically generated or to be generated in response to an input of the user or viewer of the client **12**.

At step S**131**, the PDI-S execution section **321** decides whether or not the automatic generation of a user side PDI-A is selected. If it is decided at step S**131** that the automatic generation of a user side PDI-A is selected on the screen image displayed on the display section not shown, then the processing advances to step S**132**.

At step S**132**, the PDI-S execution section **321** executes the PDI-S to read out log information from the log information

storage section **322** and generates a user side PDI-A based on the log information. In particular, the PDI-S execution section **321** analyzes the liking of the user from the behavior log of the user represented by the log information read out from the log information storage section **322** and generates a user side PDI-A representative of an answer to the question defined by the PDI-S based on a result of the analysis of the liking.

Further, the PDI-S execution section **321** analyses the liking of the user from the behavior log of the user represented by the log information stored in an external database on a network and received through the reception section **51**. Then, the PDI-S execution section **321** generates a user side PDI-A representative of answers to the questions defined by the PDI-S based on a result of the analysis of the liking.

In this manner, the PDI-S execution section **321** executes the PDI-S to interact with the user to generate a PDI-A representative of answers which reflect the liking of the user with a high degree of accuracy to the question defined by the PDI-S.

On the other hand, if it is decided at step **S131** that automatic generation of a PDI-A is not selected on the screen image displayed on the display section not shown, then the processing advances to step **S133**.

At step **S133**, the PDI-S execution section **321** generates a user side PDI-A in response to an input of the user on the screen image displayed on the display section not shown. In particular, the PDI-S execution section **321** allows the user or viewer of the client **12** to input or select answers to the questions defined in the PDI-S, which is displayed on the display section not shown, to generate a user side PDI-A representative of the answer.

Example of Screen Image Display in an Interaction with the User by the PDI-S

Here, an example of screen image display in an interaction with a user by the PDI-S is described with reference to FIGS. **36** to **39**. It is to be noted here that it is assumed that the client **12** receives a PDI-S which defines a question same as the question defined by the PDI-Q described hereinabove with reference to FIG. **7**, and screen images corresponding to the question group defined by the received PDI-S are successively displayed on the display section not shown of the client **12**.

FIG. **36** shows an example of screen image display corresponding to the question of "ProviderA:123" in FIG. **7**. In FIG. **36**, a log reference button **341** on which "Reference the recent viewing log and, if you want to automatically generate an answer to the query below: In which of the following sports are you most interested? (Multiple selection allowed), click this button. If you want to specify the answer by yourself, choose one to three answers below:" is displayed and selection buttons **342-1** to **342-4** for allowing the user to select the choices "Baseball," "Basketball," "Soccer" and "Hockey" as candidates for the answer to the question are displayed.

If the log reference button **341** is depressed by the user on the screen image shown in FIG. **36**, then the PDI-S execution section **321** reads out log information representative of the viewing log of television programs, for example, for a month in the past from the log information storage section **322** to analyze the liking of the user. Then, the PDI-S execution section **321** selects one of the candidates for the answer to the question of "ProviderA:123" which has the highest relationship to a result of the analysis of the liking and generates a user side PDT-A representative of the answer.

FIG. **37** shows an example of screen image display corresponding to the question of "ProviderA:123" in FIG. **7**. In FIG. **37**, a log reference button **351** on which the message including the question indicated in the 20th row in FIG. **7**, that is, the message "Reference the recent behavior log and, if you want to automatically generate an answer to the query below: Do you enjoy camping and outdoor recreation? (Only one selection). If you want to specify the answer by yourself, choose one answer below:" is displayed and selection buttons **352-1** to **352-3** for allowing the user to select the choices "Never," "Occasionally," and "Frequently" as candidates for the answer to the question are displayed.

If the log reference button **351** is depressed by the user on the screen image shown in FIG. **37**, then the PDI-S execution section **321** reads out log information representative of records of going out for a month in the past such as, for example, a timetable from the log information storage section **322** to analyze the liking of the user. Then, the PDI-S execution section **321** selects one of the candidates for the answer to the question of "ProviderA:ProgramX:123" which has the highest relationship to a result of the analysis of the liking and generates a user side PDI-A representative of the answer.

FIG. **38** shows an example of screen image display corresponding to the question of "ProviderA:321" in FIG. **7**. In FIG. **38**, a log reference button **361** on which the message including the question indicated in the 27th row in FIG. **7**, that is, the message "Reference the recent product search log and, if you want to automatically generate an answer to the query below: Who's products are you most interested in recently?" is displayed and an answer inputting section region **362** for allowing the user to input a character string as the answer to the question is displayed.

If the log reference button **361** is depressed by the user on the screen image shown in FIG. **38**, then the PDI-S execution section **321** reads out log information representative of commodities searched, for example, for a month in the past from a database of a company which manages a shopping site on the Internet to analyze the liking of the user. Then, the PDI-S execution section **321** generates a user side PDI-A representative of the answer to the question of "ProviderA:321" based on a result of the analysis.

FIG. **39** shows an example of screen image display corresponding to a question of "ProviderA:Special:999" which is not included in the question defined in the PDI-Q described hereinabove with reference to FIG. **7**. It is assumed that the question of "ProviderA:Special:999" is a question whose type is "AnyAnswerType" described hereinabove. In FIG. **39**, a log reference button **371** on which a message including the question provided by the PDI-S, that is, the message "Reference a recent dialog log and, if you want to automatically generate an answer to the query: "What subject are you most interested in recently? If there is no need for automatic generation of answers, click the Cancel button below." is displayed and a cancel button **372** for canceling the answer to the question is displayed.

If the log reference button **371** is depressed by the user on the screen image shown in FIG. **39**, then the PDI-S execution section **321** reads out log information representative of dialogs or sentences communicated, for example, for one week in the past from a database of a company which provides a SNS (Special Network Service) on the Internet to analyze the liking of the user. Then, the PDI-S execution section **321** generates a PDI-A representative of the answer to the question of "ProviderA:Special:999" based on a result of the analysis.

It is to be noted that, while, in the examples of screen image display shown in FIGS. **36** and **37**, the answer of the user is selected from among candidates for the answer to the question defined in the PDI-S, candidates for the answer to the question may be analogized from the behavior log of the user represented by the log information stored in the log informa-

tion storage section **322** or an external database such that the answer of the user is selected from among the analogized candidates for the answer.

FIG. **40** shows another example of screen image display corresponding to the question of "ProviderA:123" in FIG. **7**. In FIG. **40**, a question presentation region **381** in which a message including the question indicated in the 12th row in FIG. **7**, that is, the message "The following three candidates are possible as a result of choosing by analogy of various log information of yours as an answer to the query: In which of the following sports are you most interested? (Multiple selection allowed). Choose one or more," is displayed and selection buttons **382-1** to **382-3** for allowing the user to select the choices "Basketball," "Soccer" and "Hockey" as analogized candidates for the answer to the question are displayed.

In this instance, the PDI-S execution section **321** executes the PDI-S to read out log information of television programs, for example, for a month in the past to analyze the liking of the user to analogize candidates for the answer to the question of "ProviderA:123." Then, the PDI-S execution section **321** causes corresponding selection buttons to be displayed like a screen image shown in FIG. **40**. If one of the selection buttons is selected by the user, then the PDI-S execution section **321** generates a user side PDI-A representative of the answer corresponding to the selected selection button.

The PDI-S execution section **321** executes the PDI-S to automatically generate a user side PDI-A representative of the answer to the question defined by the PDI-S based on log information of the user or generate a user side PDI-A representative of an answer to the question inputted or selected by the user.

Example of the PDI-A

Here, an example of a PDI-A generated by the PDI-S execution section **321**, that is, a user side PDI-A, is described with reference to FIG. **41**. It is to be noted that the PDI-A illustrated in FIG. **41** is generated based on log information of the user.

In particular, the second to seventh rows indicate an answer of the user automatically generated to the question presented by the screen image display described hereinabove with reference to FIG. **36**. More particularly, <id>ProviderA:123</id> indicates an id element of the question presented by the screen image display of FIG. **36**, and <a>Baseball in the fourth row, <a>Soccer in the fifth row and <a>Hockey in the sixth row indicate answers selected based on the log information of the user by the PDI-S execution section **321** as an answer to the question.

The eighth to eleventh rows indicate an automatically generated answer of the user to the question present by the screen image display described hereinabove with reference to FIG. **37**. More particularly, <id>ProviderA:ProgramX:123</id> in the ninth row indicates an id element of the question presented by the screen image display of FIG. **37**, and <a>Occasionally in the tenth row indicates an answer selected based on the log information of the user by the PDI-S execution section **321** as an answer to the question.

The 12th to 15th rows indicate an answer of the user automatically generated to the question presented by the screen image display described hereinabove with reference to FIG. **38**. In particular, <id>ProviderA:231</id> in the 13th row indicates an id element of the question presented by the screen image display of FIG. **38**, and <a>Somy in the 14th row indicates an answer generated based on the log information of the user by the PDI-S execution section **321** as an answer to the question.

The 16th to 19th rows indicate an answer of the user automatically generated to the question presented by the screen image display described hereinabove with reference to FIG. **39**. In particular, <id>ProviderA:Special:999</id> in the 17th row indicates an id element of the question presented by the screen image display of FIG. **39**, and <a>jlKK3Q== in the 18th row indicates an answer generated based on the log information of the user by the PDI-S execution section **321** as an answer to the question.

Here, <a>jlKK3Q== is a provider unique filtering parameter of a provider hiding format whose substance can be grasped only by the provider which sets the question and is in a state encoded by such a method as, for example, Base64. In other words, the provider unique filtering parameter cannot be used as a filtering parameter by any other provider.

The PDI-S execution section **321** supplies the user side PDI-A generated in this manner to the PDI-A storage section **53** so as to be stored. The user side PDI-A stored in the PDI-A storage section **53** is used to decide whether or not a content distributed from the server **11** conforms to the liking of the user of the client **12** as hereinafter described.

It is to be noted that the user side PDI-A stored in the PDI-A storage section **53** is updated when the PDI-S is executed in an execution period designated in advance by the provider side by the PDI-S execution section **321**.

Referring back to the flow chart of FIG. **33**, at step S**113**, the PDI-S execution section **312** of the server **11** generates a provider side PDI-A to the questions defined by the PDI-S from the PDI-S generator **311** and supplies the generated provider side PDI-A to the metadata distributor **44**. In particular, the PDI-S execution section **312** analyzes or executes in response to an operation by staff of the broadcasting station, that is, of the provider side, and causes the display section not shown to display such screen images corresponding to the questions defined by the PDI-S as described hereinabove, for example, with reference to FIGS. **36** to **39**. Then, the PDI-S execution section **312** generates a provider side PDI-A representative of the answers to the questions. At this time, the staff of the broadcasting station would cause the PDI-S to be analyzed or executed to select answers corresponding to a content to be distributed as answers to the questions defined by the PDI-S. In particular, the provider side PDI-A generated by the PDI-S execution section **312** represents information, that is, answers, for allowing the user or viewer of the client **12** to view a content to be distributed later with the liking of the viewer taken into consideration by the provider side.

Thereafter, in the server **11**, a content corresponding to the generated provider side PDI-A is specified or referred to, and content metadata including the provider side PDI-A is generated as content metadata of the specified content. Then, the specified content is distributed together with the generated content metadata.

Also here, it is to be noted that the content may not be distributed together with the content metadata, but after the content metadata including the provider side PDI-A is transmitted to the client **12** in advance, the content corresponding to the content metadata may be distributed.

Meanwhile, in the client **12**, the content and the content metadata distributed from the server **11** are received, and matching between the user side PDI-A and the provider side PDI-A is carried out.

Here, it is assumed that the PDI-A described hereinabove with reference to FIG. **41** is generated and stored as the user side PDI-A and a PDI-A illustrated in FIG. **42** is transmitted as the provider side PDI-A from the server **11** to the client **12**.

The PDI-A illustrated in FIG. **42** has a basic configuration same as that of the user side PDI-A illustrated in FIG. **41**, and overlapping detailed description thereof is omitted herein to

avoid redundancy. However, this provider side PDI-A indicates that "Baseball" is set as an answer to the question of "ProviderA:123" and "Never" is set as an answer to the question of "ProviderA:ProgramX:123."

At this time, the client **12** compares the user side PDI-A and the provider side PDI-A with each other. Then, if answers to at least one question exhibit coincidence, then the client **12** decides that the user side PDI-A and the provider side PDI-A match with each other. However, if answers to any question do not indicate coincidence, then the client **12** decides that the user side PDI-A and the provider side PDI-A do not match with each other. In the case described above, since the answer to "ProviderA:123" in the user side PDI-A illustrated in FIG. **41** and the answer to the question of "providerA:123" in the provider side PDI-A illustrated in FIG. **42** coincide with each other in that they include "Baseball," the client **12** decides that the user side PDI-A and the provider side PDI-A match with each other.

Now, it is assumed that a PDI-A illustrated in FIG. **43** is transmitted as the provider side PDI-A from the server **11**.

The provider side PDI-A illustrated in FIG. **43** indicates that "Basketball" is selected as an answer to the question of "ProviderA:123" and "Never" is selected as an answer to the question of "ProviderA:ProgramX:123."

In this instance, since the answers to the questions in the user side PDI-A illustrated in FIG. **41** and the answers to the questions in the provider side PDI-A illustrated in FIG. **43** exhibit no coincidence, it is decided that the user side PDI-A and the provider side PDI-A do not match with each other.

From a result of such a matching process as described above, it is determined whether or not the distributed content should be acquired.

According to the process described above, in the broadcasting system, on the provider side, a PDI-S for obtaining a user side PDI-A to questions regarding the liking of a user is generated by the server, and the PDI-S is transmitted to the client terminal. Further, a provider side PDI-A representative of an answer set by the provider side to the PDI-S is distributed as content metadata of a corresponding content. Consequently, as content metadata, content metadata which satisfies needs at the time other than content metadata prescribed by a standardization organization can be applied to a content. On the other hand, on the user side, the PDI-S from the server is executed by the client terminal to generate a user side PDI-A, and matching between the generated user side PDI-A and the provider side PDI-A from the server is carried out to determine whether or not the content distributed from the server should be acquired. Consequently, the content can be filtered with the content metadata which satisfies needs at the time other than content metadata prescribed by a standardization organization. Accordingly, a content which satisfies needs at the time can be acquired.

Further, on the client terminal, since interaction with the user can be carried out with the PDI-S, even if a question set by the provider side has the substance which requires a high interactivity, sufficient interaction with the user can be carried out. Accordingly, since a user side PDI-A which reflects the liking of the user with a high degree of accuracy can be generated, an accurate filtering condition can be obtained, and consequently, a content which satisfies needs at the time can be acquired with a higher degree of certainty.

It is to be noted that, also in a broadcasting system wherein a script is executed to carry out interaction with a user, one of a user side PDI-A and a provider side PDI-A may be represented as a query for evaluating a PDI-A to compare the user side PDI-A and the provider side PDI-A with each other to carry out matching.

In the following, a configuration wherein one of a user side PDI-A and a provider side PDI-A is represented as a query to compare the user side PDI-A and the provider side PDI-A with each other is described.

Example 3 of the Matching Process by a Query for Evaluating a PDI-A

First, a configuration which represents a provider side PDI-A as a query to compare a user side PDI-A and the provider side PDI-A with each other is described.

FIG. **44** shows an example of a functional configuration of the server **11** which represents a provider side PDI-A as a query.

The server **11** of FIG. **44** includes a transmission section **42**, a content accumulation section **45**, a content distributor **46**, a PDI-S generator **311**, a PDI-S execution section **391**, and a metadata distributor **392**.

It is to be noted that, in the server **11** of FIG. **44**, like elements having like functions to those of the elements provided in the server **11** of FIG. **31** are denoted by like terms and like reference characters and overlapping description of them is suitably omitted herein to avoid redundancy.

The server **11** of FIG. **44** is different from the server **11** of FIG. **31** in that the PDI-S execution section **391** and the metadata distributor **392** are provided in place of the PDI-S execution section **312** and the metadata distributor **44**.

The PDI-S execution section **391** executes a PDI-S from the PDI-S generator **311** to generate a provider side PDI-A representative of an answer set by the provider to the questions regarding the liking of the user of the client **12**. Then, the PDI-S execution section **391** applies the generated provider side PDI-A to a predetermined conditional statement to generate a PDI-A query and supplies the generated PDI-A query to the metadata distributor **392**.

The metadata distributor **392** specifies or refers to, based on the PDI-A query from the PDI-S execution section **391**, a content corresponding to the PDI-A query from among the contents accumulated in the content accumulation section **45**. The metadata distributor **392** generates content metadata including the PDI-A query as content metadata of the specified content and transmits the generated content metadata to the client **12** through the transmission section **42**.

Further, the client **12** in the present example is same as the client **12** described hereinabove with reference to FIG. **32** except that the content filter **54** shown in FIG. **32** reads out the user side PDI-A from the PDI-A storage section **53** and a content is filtered based on the user side PDI-A and the PDI-A query included in the content metadata transmitted from the server **11** to the client **12**.

Now, content transmission and reception processes in the broadcasting system **10** including the server **11** of FIG. **44** are described with reference to a flow chart of FIG. **45**.

It is to be noted that processes at steps S**151**, S**152**, S**156**, S**161** to S**163**, S**165** and S**166** of the flow chart of FIG. **45** are basically similar to the processes at steps S**111**, S**112**, S**116**, S**121** to S**123**, S**125** and S**126** of the flow chart of FIG. **33**, respectively. Therefore, overlapping description of the processes is omitted herein to avoid redundancy.

In particular, at step S**153**, the PDI-S execution section **391** of the server **11** generates a provider side PDI-A to the questions defined in the PDI-S from the PDI-S generator **311** and applies the generated provider side PDI-A to a predetermined conditional statement to generate a PDI-A query. Then, the PDI-S execution section **391** supplies the generated provider side PDI-A to the metadata distributor **392**. More particularly, for example, the PDI-S execution section **391** analyzes or executes the PDI-S in response to an operation of staff of a broadcasting station, that is, of the provider side so that such

screen images corresponding to the questions defined in the PDI-S as described hereinabove, for example, with reference to FIGS. **36** to **39** are displayed on the display section not shown, thereby setting the answers corresponding to the questions. Further, the PDI-S execution section **391** causes the staff to determine a combination of the individual answers, that is, a filtering condition, to generate a PDI-A query representative of the combination of the answers. At this time, the staff of the broadcasting station would cause the PDI-S execution section **391** to analyze or execute the PDI-S to select answers corresponding to the content to be distributed as answers to the questions defined in the PDI-S and determine a combination of the answers. In other words, the PDI-A query generated by the PDI-S execution section **391** represents information for allowing the user or viewer of the client **12** to view a content to be distributed later, that is, the combination of answers, with the liking of the viewer taken into consideration by the provider side.

At step S**154**, the metadata distributor **392** specifies or refers to, based on the PDI-A query from the PDI-S execution section **391**, a content corresponding to the PDI-A query from among the contents accumulated in the content accumulation section **45**. The content specified here may be a content having a similarity to content metadata applied in advance to the accumulated content higher than a predetermined value or may be a content selected in advance as a content to be viewed by the user by the staff of the broadcasting station. It is to be noted that the content specified by the metadata distributor **392** is acquired from the content accumulation section **45** by the content distributor **46**.

At step S**155**, the metadata distributor **392** newly generates, based on the content metadata applied in advance to the content specified at step S**154** and the PDI-A query from the PDI-S execution section **391**, content metadata including the PDI-A query.

Then at step S**164**, the content filter **54** of the client **12** carries out matching of the user side PDI-A stored in the PDI-A storage section **53** based on the PDI-A query included in the content metadata from the server **11**.

Here, it is assumed that the PDI-A described hereinabove with reference to FIG. **41** is generated and stored as the user side PDI-A and a PDI-A given below has been transmitted from the server **11** to the client **12**:

"//QSA[id='ProviderA:123' and a='Baseball']"

The PDI-A query indicates that the user PDI-A evaluates whether or not "Baseball" is selected as an answer to the question of "ProviderA:123."

At this time, when the content filter **54** evaluates the user side PDI-A based on the PDI-A query that the PDI-A query is satisfied, that is, the PDI-A query is true, it decides that the user side PDI-A and the PDI-A query match with each other. However, if the PDI-A query is not satisfied or is false, then the content filter **54** decides that the user side PDI-A and the PDI-A query do not match with each other. In the present instance, since, in the user side PDI-A illustrated in FIG. **41**, "Baseball" is selected as the answer to the question of "ProviderA:123," it is decided that the user side PDI-A and the PDI-A query match with each other.

Since a condition of complicated filtering is represented by the PDI-A query set by the provider side can be represented in this manner, it becomes possible to allow the user or viewer expected by the provider side to acquire a content with a higher degree of certainty.

Example 4 of the Matching Process by a Query for Evaluating a PDI-A

Now, a configuration which represents a user side PDI-A as a query to compare the user side PDI-A and a provider side PDI-A is described.

FIG. **46** shows an example of a functional configuration of the client **12** which represents a user side PDI-A as a query.

Referring to FIG. **46**, the client **12** shown includes a reception section **51**, a content filter **54**, a content reproduction section **55**, a content accumulation section **56**, a log information storage section **322**, a PDI-S execution section **401** and a PDI-A query storage section **402**.

It is to be noted that, in the client **12** of FIG. **46**, like elements having like functions to those of the elements provided in the client **12** of FIG. **32** are denoted by like terms and like reference characters and overlapping description of them is suitably omitted herein to avoid redundancy.

In particular, the client **12** of FIG. **46** is different from the client **12** of FIG. **32** in that it includes the PDI-S execution section **401** and the PDI-A query storage section **402** in place of the PDI-S execution section **321** and the PDI-A storage section **53**.

The PDI-S execution section **401** executes a PDI-S transmitted thereto from the server **11** to generate a user side PDI-A representative of answers of the user of the client **12** to questions regarding the liking of the user. Then, the PDI-S execution section **401** applies the generated user side PDI-A to a predetermined conditional statement to generate a PDI-A query and supplies the generated PDI-A query to the PDI-A query storage section **402**.

The PDI-A query storage section **402** stores the PDI-A query from the PDI-S execution section **401**. The PDI-A query stored in the PDI-A query storage section **402** is suitably read out into the content filter **54**.

It is to be noted that the content filter **54** reads out the PDI-A query from the PDI-A query storage section **402** and filters a content based on the read out PDI-A query and a provider side PDI-A included in content metadata transmitted to the client **12** from the server **11**.

Further, the server **11** in the present example is same as the server **11** of FIG. **31**, and therefore, overlapping description thereof is omitted herein to avoid redundancy.

Now, content transmission and reception processes in the broadcasting system **10** which includes the client **12** of FIG. **46** are described with reference to a flow chart of FIG. **47**.

It is to be noted that processes at steps S**171** to S**181**, S**183**, S**185** and S**186** are basically similar to the processes at steps S**111** to S**121**, S**123**, S**125** and S**126** of the flow chart of FIG. **33**, respectively, and therefore, overlapping description of them is omitted herein to avoid redundancy.

In particular, at step S**182**, the PDI-S execution section **401** of the client **12** carries out a PDI-S execution process to generate a PDI-A query.

Example of the PDI-S Execution Process

Here, details of the PDI-S execution process by the PDI-S execution section **401** are described with reference to FIG. **48**. After the PDI-S execution process is started, the PDI-S execution section **401** causes the display section not shown to display a screen image corresponding to the questions defined by the PDI-S. Then, the PDI-S execution section **401** causes the user to select whether the user side PDI-A representative of the answers to the questions should be applied to a predetermined conditional statement to automatically generate a PDI-A query or a PDI-A query should be generated in response to an input of the user or viewer of the client **12**.

At step S**191**, the PDI-S execution section **401** decides whether or not automatic generation of a PDI-A query is

selected. If it is decided at step S**191** that automatic generation of a PDI-A is selected on the screen image displayed on the display section not shown, then the processing advances to step S**192**.

At step S**192**, the PDI-S execution section **401** executes the PDI-S to read out log information from the log information storage section **322** and generates a PDI-A query based on the read out log information. More particularly, the PDI-S execution section **401** analyzes the liking of the user from the behavior log of the user represented by the log information read out from the log information storage section **322** and generates answers to the questions defined by the PDI-S based on a result of the analysis of the liking. Further, the PDI-S execution section **401** decides a combination of the questions, that is, a filtering condition, based on the log information to generate a PDI-A query representative of the combination of the answers.

Further, the PDI-S execution section **401** analyzes the liking of the user from the behavior log of the user presented by log information stored in a database on an external network and received through the reception section **51**. Then, the PDI-S execution section **401** generates answers to the questions defined by the PDI-S based on a result of the analysis of the liking. Further, the PDI-S execution section **401** determines a combination of the answers, that is, a filtering condition, based on the log information to generate a PDI-A query representative of the combination of the answers.

In this manner, the PDI-S execution section **401** executes the PDI-S and interacts with the user to generate a PDI-A query representative of answers which reflect the liking of the user with a high degree of accuracy to the questions defined in the PDI-S.

On the other hand, if it is decided at step S**191** that automatic generation of a PDI-A query is not selected on the screen image displayed on the display section not shown, then the processing advances to step S**193**.

At step S**193**, the PDI-S execution section **401** generates a PDI-A query in response to an input of the user on the screen image displayed on the display section not shown. More particularly, the PDI-S execution section **401** causes the user or viewer of the client **12** to input or select answers to the questions defined in the PDI-S and displayed on the display section not shown and causes the user to determine a combination of the answers, that is, a filtering condition, to generate a PDI-A query representative of the combination of answers.

The PDI-S execution section **401** supplies the PDI-A query generated in this manner to the PDI-A query storage section **402** so as to be stored.

Referring back to the flow chart of FIG. **47**, at step S**184**, the content filter **54** carries out matching of the provider side PDI-A included in the content metadata from the server **11** based on the PDI-A query stored in the PDI-A query storage section **402**.

Here, it is assumed that the PDI-A described hereinabove with reference to FIG. **42** is transmitted as the provider side PDI-A from the server **11** and a PDI-A query given below is generated and stored:

"//QSA[id='ProviderA:123' and a='Baseball']" and //QSA[id='ProviderA:ProgramX:123' and a='Never']

The PDI-A query given above represents that the provider side PDI-A evaluates whether or not "Baseball" is selected as an answer to the question of "ProviderA:123" and besides "Never" is selected as an answer to the question of "ProviderA:ProgramX:123."

At this time, the content filter **54** evaluates the provider side PDI-A based on the PDI-A query and, if the PDI-A query is satisfied or true, then the content filter **54** decides that the provider side PDI-A and the PDI-A query match with each other. However, if the PDI-A query is not satisfied or is false, then the content filter **54** decides that the provider side PDI-A and the PDI-A query do not match with each other. In the present instance, in the provider side PDI-A illustrated in FIG. **42**, "Baseball" is selected as an answer to the question of "ProviderA: 123" and besides "Never" is selected as an answer to the question of "ProviderA:ProgramX:123." Therefore, the content filter **54** decides that the provider side PDI-A and the PDI-A query match with each other.

Since a more detailed filtering condition can be represented by the PDI-A query set by the user side in this manner, a content expected by the user side can be acquired with a higher degree of certainty.

Application Example to a Broadcasting System which Broadcasts by the ATSC-M/H System

Incidentally, also the broadcasting system of the present embodiment described above can be applied to a broadcasting system which broadcasts by the ATSC-M/H method.

In such an instance, a PDI-A, that is, a provider side PDI-A, or a PDI-A query is placed into at least one of the "Service" fragment (FIG. **23**), the "Schedule" fragment (FIG. **24**) and the "Content" fragment (FIG. **25**) from among the components of the Service Guide illustrated in FIG. **22** as described hereinabove.

Meanwhile, a PDI-S is placed into the "Interactivity Data" fragment from among the components of the Service Guide illustrated in FIG. **22**.

FIG. **49** illustrates details of a configuration of the "Interactivity Data" fragment. The PDI-S is placed into a "PDI-S" element newly added to the "PrivateExt" element set at the lowermost stage in the Interactivity Data" fragment illustrated in FIG. **49**. In particular, for example, the "PDI-S" element is represented by a character string as <xs:element name='PDI-S' type='xs:string' xmins:xs="http://www.w3.org/2001/SML.Schema'/> by the XML schema and is encoded.

Application Example to a Broadcasting System which Carries Out NRT Broadcasting

The broadcasting system of the present embodiment can be applied also to a broadcasting system which carries out NRT broadcasting.

In such an instance, a PDI-A, that is, a provider side PDI-A, a PDI-A query or a PDI-S to be transmitted from the server **11** to the client **12** in the broadcasting system **10** described hereinabove is placed into and transmitted together with the "PDI descriptor" newly prescribed in SMT or NRT-IT (FIG. **29**).

FIG. **50** illustrates an example of the syntax of "PDI Descriptor." In FIG. **50**, each of the descriptors described is defined together with the bit number (No. of Bits) and the format (Format).

According to the syntax illustrated in FIG. **50**, a PDI-A, a PDI-A query or a PDI-S is described in the descriptor "PDI_S or PDI_A or PDI_A_Query" of variable bits.

It is to be noted that the broadcasting system of the present embodiment can naturally be applied to a broadcasting system which broadcasts by the ATSC-M/H method described above and a broadcasting system which carries out NRT broadcasting by a method other than the existing broadcasting system.

Incidentally, in the embodiment described above, PDI-As, that is, a user side PDI-A and a provider side PDI-A, are generated as metadata of a text representation of the XML or the like and is used for filtering, that is, for a matching process. In particular, in filtering, texts, that is, XML instances, are compared with each other to determine whether or not they are same as each other.

However, since the process of comparing texts with each other requires a high cost in regard to the CPU load and the memory use amount, in the case where the amount of a content or contents to be distributed at a time is great, there is the possibility that the process may disturb efficient filtering of the distributed content or contents.

Therefore, in the following description, an embodiment of the present invention regarding a broadcasting system wherein a distributed content is filtered more efficiently is described.

3. Third Embodiment

Example of a Functional Configuration of the Server

First, an example of a functional configuration of the server **11** in the broadcasting system **10** wherein metadata is represented by a bitmap index is described with reference to FIG. **51**.

The server **11** of FIG. **51** includes a transmission section **42**, a content accumulation section **45**, a content distributor **46**, a PDI-Q generator **411**, a PDI-BA generator **412**, and a metadata distributor **413**.

It is to be noted that, in the server **11** of FIG. **51**, like elements having like functions to those of the elements provided in the server **11** of FIG. **3** are denoted by like terms and like reference characters and overlapping description of them is suitably omitted herein to avoid redundancy.

In particular, the server **11** of FIG. **51** is different from the server **11** of FIG. **3** in that the PDI-Q generator **411**, PDI-BA generator **412** and metadata distributor **413** are provided in place of the PDI-Q generator **41**, PDI-A generator **43** and metadata distributor **44**.

The PDI-Q generator **411** generates a PDI-Q representative of a question about the liking of the user or viewer of the client **12**, and transmits the generated PDI-Q to the client **12** through the transmission section **42** and supplies the PDI-Q to the PDI-BA generator **412**. The id element of each question defined by the PDI-Q generated by the PDI-Q generator **411** is represented by a bitmap index, that is, a bit string, as hereinafter described.

The PDI-BA generator **412** generates, based on the PDI-Q from the PDI-Q generator **411**, a PDI-BA (Preference Demographic and Interest-Bitmap Answer) (hereinafter referred to suitably as provider side PDI-BA) which is information represented by a bitmap index, that is, a bit string, representing an answer set by the provider side to the questions regarding the liking of the user of the client **12** described hereinabove corresponding to the PDI-Q. Then, the PDI-BA generator **412** supplies the generated PDI-BA to the metadata distributor **413**.

The metadata distributor **413** specifies or refers to, based on the PDI-BA from the PDI-BA generator **412**, a content corresponding to the answer set by the provider side from among the contents accumulated in the content accumulation section **45**. The metadata distributor **413** generates content metadata including the PDI-BA as content metadata of the specified content and transmits the generated content metadata to the client **12**.

Example of the Functional Configuration of the Client

Now, an example of a functional configuration of the client **12** in the broadcasting system **10** wherein metadata is represented by a bitmap index is described with reference to FIG. **52**.

The client **12** of FIG. **52** includes a reception section **51**, a content reproduction section **55**, a content accumulation section **56**, a PDI-BA generator **421**, a PDI-BA storage section **422** and a content filter **423**.

It is to be noted that, in the client **12** of FIG. **52**, like elements having like functions to those of the elements provided in the client **12** of FIG. **4** are denoted by like terms and like reference characters and overlapping description of them is suitably omitted herein to avoid redundancy.

In particular, the client **12** of FIG. **52** is different from the client **12** of FIG. **4** in that the PDI-BA generator **421**, PDI-BA storage section **422** and content filter **423** are provided in place of the PDI-A generator **52**, PDI-A storage section **53** and content filter **54**, respectively.

The PDI-BA generator **421** generates, based on the PDI-Q transmitted to the client **12** from the server **11**, a PDI-BA (hereinafter referred to suitably as user side PDI-BA) which is information represented by a bitmap index representing answers of the user to the questions regarding the liking of the user of the client **12** corresponding to the PDI-Q. Then, the PDI-BA generator **421** supplies the generated PDI-BA to the PDI-BA storage section **422**.

The PDI-BA storage section **422** stores the PDI-BA from the PDI-BA generator **421**. The PDI-BA stored in the PDI-BA storage section **422** is read out suitably from the content filter **423**.

The content filter **423** reads out the PDI-BA from the PDI-BA storage section **422** and filters a content based on the read out PDI-BA, that is, based on the user side PDI-BA, and the PDI-BA included in the content metadata of the content transmitted from the server **11**, that is, the provider side PDI-BA. The content filter **423** supplies the filtered content to the content reproduction section **55** or the content accumulation section **56** in response to a result of the filtering.

Example of Content Transmission and Reception Processes

Now, content transmission and reception processes of the broadcasting system **10** configured from the server **11** of FIG. **51** and the client **12** of FIG. **52** are described with reference to a flow chart of FIG. **53**.

In particular, if, on the provider side such as a broadcasting company, for example, a sponsor of a content to be broadcast or distributed or the broadcasting company itself issues a request for distribution of a content to viewers having a particular liking or attribute, then the PDI-Q generator **411** of the server **11** generates a PDI-Q at step S**211**. In particular, the PDI-Q generator **411** generates, in response to an operation of staff on the provider side, a PDI-Q to the user of the client **12** for inquiring about what liking or attribute the user has.

Further Example of the Syntax of the XML Schema

Here, an example of the syntax of the XML schema for configuring a PDI-Q and a PDI-BA in the present embodiment is described with reference to FIGS. **54** and **55**.

It is to be noted that the first to 50th rows of the syntax illustrated in FIG. **54** are basically similar to the first to 50th rows of the syntax illustrated in FIG. **34**, respectively, and therefore, overlapping description of them is omitted herein to avoid redundancy.

It is to be noted that, in FIG. **54**, the type of id elements for identification of the items of the questions defined by the names of "QIA," "QBA," "QSA," "QTA" and "QAA" indicated in the 15th, 24th, 31st, 40th and 47th rows is defined as "BitmapAnyURIType," different from that in FIG. **34**.

Further, in FIG. **54**, the type of answers, that is, of a elements, to the questions defined by the names of "QBA," "QSA" and "QAA" indicated in the 26th, 33rd and 48th rows is defined as "BitmapBooleanURIType," "BitmapStringURI-

Type" and "BitmapBase64 BinaryURIType, respectively, different from those in FIG. **34**.

The 51st to 57th rows in FIG. **55** indicate a declaration of the attribute of the id element of the type defined by "BitmapAnyURIType."

The 58th to 64th rows indicate a declaration of the attribute of the a elements of the type defined by "BitmapBooleanURIType."

Further, the 65th to 71st rows indicate a declaration of the attribute of the a elements of the type defined by "BitmapStringURIType," and the 72nd to 78th rows indicate a declaration of the attribute of the a elements of the type defined by "BitmapBase64 BinaryURIType."

In particular, the 51st to 78th rows of FIG. **55** declare that the id elements of all of the questions defined by the PDI-Q and the answers, that is, the a elements, to the questions defined by the names of "QBA," "QSA" and "QAA" are represented by a bitmap index.

It is to be noted that also the questions and the answers to the questions declared in the syntaxes of FIGS. **54** and **55** are distinguished into provider common filtering parameters and provider unique filtering parameters.

Further, the answers, that is, the a elements, to the questions defined by the name of "QAA" are distinguished into provider unique filtering parameters of a format in which only the provider which sets the question can grasp the substance and of a provider unique format encoded by the Base64 system.

Example of the PDI-Q

Now, an example of a PDI-Q configured based on the indexes of FIGS. **54** and **55** is described with reference to FIG. **56**.

It is to be noted that the questions defined by the PDI-Q illustrated in FIG. **56** are basically same as those of the PDI-Q illustrated in FIG. **7**, and therefore, overlapping description of them is omitted herein to avoid redundancy.

However, in FIG. **56**, the id elements of the questions defined by the names of "QBA" and "QSA" and the answers, that is, the a elements, to the questions are represented by a bitmap index, different from those in FIG. **7**.

In particular, the id element of the question of "Common:111" in the third row is represented by a bitmap string of "00000000000101." It is to be noted that <!-True=1, False=0- -> in the fourth row indicates that the answer to the question of "Common:111" which is a question for requesting an answer of the logic value type is represented by one of the bits of "1" (True) and "0" (False).

The id element of the question of "ProviderA:123" in the 10th row is represented by a bit string of "00000100000111." Further, "Baseball" in the 13th row, "Basketball" in the 14th row, "Soccer" in the 15th row and "Hockey" in the 16th row which are choices as candidates for an answer to the question are represented by bit strings of "0001," "0010," "0100" and "1000," respectively.

The id element of the question of "ProviderA:ProgramX:123" in the 19th row is represented by a bit string of "00000100000101." Meanwhile, "Never" in the 21st row, "Occasionally" in the 22nd row and "Frequently" in the 23rd row which are choices as candidates for an answer to the question are represented by bit strings of "001," "010" and "100," respectively.

In this manner, in the PDI-Q indicated in FIG. **56**, the id elements of the questions which request answers of the logic value type and the answer selection type and the answers to the questions, that is, the a elements, are represented by a bitmap index.

It is to be noted that the answers to the questions which request answers of the integer value type and the character string type are not selected from among choices as a plurality of, that is, two or more, candidates like answers to questions which request answers of the logic value type and the answer selection type, but are integer values or character strings inputted arbitrarily by the user, and therefore are not represented by a bitmap index. Further, although, according to the syntaxes of FIGS. **54** and **55**, id elements of questions which request answers of the integer value type and the character string type can be represented by a bitmap index, it is assumed here that they are not represented by a bitmap index.

Here, the following description is given under the assumption that the questions defined by a PDI-Q are those which request answers of the logic value type and the answer selection type.

Referring back to the flow chart of FIG. **53**, at step S**212**, the PDI-Q generator **411** of the server **11** transmits the generated PDI-Q to the client **12** through the transmission section **42** and supplies the PDI-Q to the PDI-BA generator **412**.

At step S**221**, the reception section **51** of the client **12** receives the PDI-Q transmitted from the server **11** and supplies the received PDI-Q to the PDI-BA generator **421**.

It is to be noted that the PDI-Q may be received by the client **12**, for example, every time it is broadcast or transmitted after a predetermined interval of time from a broadcasting station as a provider in which the server **11** is installed. Or, the PDI-Q may be received by the client **12** when the client **12** adjusts the channel to the broadcasting station in which the server **11** is installed.

At step S**222**, the PDI-BA generator **421** of the client **12** generates a user side PDI-BA to the questions defined in the PDI-Q received by the reception section **51**. In particular, when the PDI-Q is received from the server **11**, the PDI-BA generator **421** causes the display section not shown to display screen images corresponding to questions defined in the PDI-Q and causes the user or viewer of the client **12** to input or select answers to the questions to generate a user side PDI-BA representative of the answers. In other words, the PDI-BA generator **421** interacts with the user to generate a user side PDI-BA representative of answers to the questions defined in the PDI-Q.

Here, it is assumed that the client **12** receives a PDI-Q in which only questions which request answers of the logical value type and the answer selection type in FIG. **56** and, the screen images shown in FIGS. **8**, **10** and **11** are successively displayed as screen images corresponding to the question group defined in the received PDI-Q on the display section not shown of the client **12**.

Further, it is assumed that, on the screen image corresponding to the question of "Common:111" described hereinabove with reference to FIG. **8**, the selection button **62-1** is selected by the user as an answer to the question. Further, on the screen image corresponding to the question of "ProviderA:123" described hereinabove with reference to FIG. **10**, the selection buttons **82-1**, **82-2**, **82-3** and **82-4** are selected as an answer to the question by the user. Further, on the screen image corresponding to the question of "ProviderA:ProgramX:123" described hereinabove with reference to FIG. **11**, the selection button **92-2** is selected as an answer to the question by the user.

At this time, the user side PDI-BA generated by the PDI-BA generator **421** is such as given below:

{"00000000000101":"1"
"00000100000111":"1101"
"00000100000101":"010"}

In the user side PDI-BA described above, the first row indicates an id element of the question of "Common:111" and that "True" is selected as an answer to the question.

The second row indicates an id element of the question of "PoviderA:123" and that "Baseball," "Soccer" and "Hockey" are selected as an answer to the question. While the bitmap index notation of the answers is "0001," "0100" and "1000," since a plurality of answers, that is, one to three answers, are permitted by the question of "ProviderA:123," "1101" obtained by OR coupling the bits of the answers is the bitmap index notation of the answer to the question of "ProviderA: 123."

The third row indicates an id element of the question of "ProviderA:ProgramX:123" and that "Occasionally" is selected as an answer to the question. Since the question of "ProviderA:ProgramX:123" restricts the number of answers to one, a notation of OR coupling of bits in the bitmap index notation of the candidates for an answer is not used, but "010" representative of "Occasionally" becomes a bitmap index notation of the answer to the question of the "ProviderA: ProgramX:123."

It is to be noted that the values of the bits representative of the answer in the user side PDI-BA are actually mapped on a binary field.

FIG. **57** illustrates an example of an answer in a user side PDI-BA mapped on a binary field.

At a right upper portion of FIG. **57**, an id element of the question of "ProviderA:ProgramX:123" and an answer to the question in the user side PDI-BA described hereinabove are indicated. As seen in FIG. **57**, the six high order bits of the id element of the question represented in the bitmap index notation are mapped to six low order bits of a bit string B**1** of one byte, and eight low order bits of the id element of the question are mapped to bits of a bit string B**2** of one byte. Further, the three bits of the answer to the question, that is, the a element, are mapped to three low order bits of a bit string B**3** of one byte.

In this manner, an id element of one question in a user side PDI-BA and an answer to the question can be represented by three bytes at the most, and a question and an answer to the question can be specified only by the three bytes.

The PDI-BA generator **421** supplies the user side PDI-BA generated in this manner to the PDI-BA storage section **422** so as to be stored. The user side PDI-BA stored in the PDI-BA storage section **422** is used to decide whether or not a content distributed from the server **11** conforms to the liking of the user of the client **12** as hereinafter described.

Referring back again to the flow chart of FIG. **53**, at step S**213**, the PDI-BA generator **412** of the server **11** generates a provider side PDI-BA to the question defined in the PDI-Q from the PDI-Q generator **411** and supplies the generated provider side PDI-BA to the metadata distributor **413**. In particular, when a PDI-Q is generated in response to an operation of staff in the broadcasting station or provider side, the PDI-BA generator **412** causes the display section not shown to display such screen images corresponding to the questions defined in the PDI-Q as described hereinabove with reference to FIGS. **8**, **10** and **11**. Then, the PDI-BA generator **412** causes the staff of the broadcasting station to input or select answers to the questions to generate a provider side PDI-BA representative of the answers. At this time, the staff of the broadcasting station would input or select answers corresponding to a content to be distributed as answers to the questions defined in the PDI-Q. In other words, the provider side PDI-BA generated by the PDI-BA generator **412** represents information or answers for allowing the user or viewer of the client **12** to view a content to be distributed later with the liking of the viewer taken into consideration.

At step S**214**, the metadata distributor **413** specifies or refers to, based on the provider side PDI-BA from the PDI-BA generator **412**, a content corresponding to the PDI-BA from among the contents accumulated in the content accumulation section **45**. The content specified here may be a content having a similarity between the answer represented by the provider side PDI-BA from the PDI-BA generator **412** and content metadata applied in advance to the accumulated content higher than a predetermined value or may be a content selected in advance as a content to be viewed by the user by the staff of the broadcasting station. It is to be noted that the content specified by the metadata distributor **413** is acquired from the content accumulation section **45** by the content distributor **46**.

At step S**215**, the metadata distributor **413** newly generates, based on the content metadata applied in advance to the content specified at step S**215** and the provider side PDI-BA from the PDI-BA generator **412**, content metadata including the provider side PDI-BA.

At step S**216**, the transmission section **42** distributes the content acquired by the content distributor **46** together with the content metadata generated by the metadata distributor **413**. At this time, as the content metadata, content metadata prescribed by a standardization organization may be transmitted in addition to the content metadata generated by the metadata distributor **44**.

In this manner, a content whose content metadata includes a provider side PDI-BA representative of answers intended by the provider side, or in other words, a content which conforms to the liking of the user and whose viewing is expected by the provider side is distributed as the answers to the questions defined by the PDI-Q.

It is to be noted that the processes at steps S**213** to S**216** need not be executed immediately after the process at step S**212** but may be executed before a PDI-BA is generated by and stored into the client **12** owned by each user.

Further, while the content is distributed together with the content metadata at step S**216**, the content may not be distributed together with the content metadata, but otherwise, after the content metadata including the PDI-BA is transmitted to the client **12** in advance, the content corresponding to the content metadata may be distributed.

After the content and the content metadata are distributed in this manner, the reception section **51** of the client **12** receives the content and the content metadata distributed from the server **11** and supplies the received content and content metadata to the content filter **423** at step S**223**.

At step S**224**, the content filter **423** carries out matching between the user side PDI-BA stored in the PDI-BA storage section **422** and the provider side PDI-BA included in the content metadata from the server **11**.

Example of the Matching Process by the Content Filter

Here, it is assumed that the user side PDI-BA described hereinabove is generated and stored as the user side PDI-BA and a provider side PDI-BA given below is transmitted from the server **11** to the client **12**.

{"00000100000111":"0001"}

This provider side PDI-BA has a basically same configuration as the user side PDI-BA described hereinabove, and therefore, detailed description thereof is omitted herein to avoid redundancy. However, this provider side PDI-BA indicates that "Baseball" is selected as an answer to the question of "ProviderA:123."

At this time, the content filter **423** compares the user side PDI-BA and the provider side PDI-BA with each other, and if

they coincide with each other between the answers thereof to at least one of the questions, the content filter **423** decides that the user side PDI-BA and the provider side PDI-BA match with each other. However, if the user side PDI-BA and the provider side PDI-BA do not coincide with each other between the answers to any question, then the content filter **423** decides that they do not match with each other. In the present instance, since the answer to the question of "ProviderA:123" in the user side PDI-BA described hereinabove and the answer to the question of "ProviderA:123" in the provider side PDI-BA coincide with each other in that both of them include the bits representative of "Baseball," it is decided that the user side PDI-BA and the provider side PDI-BA match with each other.

It is assumed that a PDI-BA given below is transmitted as the provider side PDI-BA subsequently:

{"00000100000111":"0010"
"00000100000101":"001"}

This provider side PDI-BA indicates that "Baseball" is selected as an answer to the question of "ProviderA:123" and "Never" is selected as an answer to the question of "ProviderA:ProgramX:123."

In this instance, since the answer to the question in the user side PDI-BA described above and any answer to the questions in the provider side PDI-BA do not coincide with each other, it is decided that the user side PDI-BA and the provider side PDI-BA do not match with each other.

The content filter **423** carries out the matching process between the user side PDI-BA and the provider side PDI-BA in this manner.

At step S**225**, the content filter **423** decides whether or not the user side PDI-BA and the provider side PDI-BA match with each other. If it is decided at step S**225** that the user side PDI-BA and the provider side PDI-BA match with each other, then the content filter **423** decides that the content distributed from the server **11** conforms to the liking of the user or viewer of the client **12**. Then, the content filter **423** supplies the content to the content reproduction section **55** or the content accumulation section **56**, and then the processing advances to S**226**.

In the case where the content distributed from the server **11** is supplied from the content filter **423** to the content reproduction section **55**, the content reproduction section **55** reproduces the content at step S**226**. On the other hand, in the case where the content distributed from the server **11** is supplied from the content filter **423** to the content accumulation section **56**, the content accumulation section **56** accumulates or records the content at step S**226**. The accumulated content is supplied to and reproduced by the content reproduction section **55** suitably in response to an operation instruction of the user.

On the other hand, if it is decided at step S**225** that the user side PDI-BA and the provider side PDI-BA do not match with each other, then the content filter **423** decides that the content distributed from the server **11** does not conform to the liking of the user or viewer of the client **12** and abandons or deletes the content. The, the processing is ended.

According to the process described above, on the provider side, a PDI-Q representative of questions regarding the liking of the user is generated by the server. Then, the PDI-Q is transmitted to the client terminal, and the provider side PDI-BA representative of the answers set by the provider side to the PDI-Q is distributed as content metadata of the corresponding content. Consequently, content metadata which satisfies needs at the time other than content metadata prescribed by a standardization organization can be applied to a content. On the other hand, on the user side, a user side PDI-BA representative of answers of the user to the PDI-Q from the server is generated, and matching between the thus generated user side PDI-BA and the provider side PDI-BA from the server is carried out to determine whether or not the content distributed from the server should be acquired. Consequently, a content can be filtered with content metadata which satisfies needs at the time other than content metadata prescribed by a standardization organization. Accordingly, a content which satisfies current needs can be acquired.

Meanwhile, in the case where the questions defined in the PDI-Q request answers of the logical value type and the answer selection type, when the client terminal carries out filtering of a content, the user side PDI-BA and the provider side PDI-BA represented by bitmap indices are compared with each other. Therefore, the cost in regard to the CPU load and the memory use amount is lower than that in the case where the user side PDI-A and the provider side PDI-A of text representations are compared with each other. Thus, even if a great amount of contents are distributed at a time, the distributed contents can be filtered efficiently.

It is to be noted that, while, in the foregoing description, the questions defined by the PDI-Q are only questions which request answers of the logic value type and the answer selection type, naturally they may otherwise include questions which request answers of the integer value type or the character string type. In this instance, the PDI-BAs, that is, the user side PDI-BA and the provider side PDI-BA, include answers of the text representation as answers to the questions which request answers of the integer value type and the character string type. In particular, to a question whose id element is represented in a bitmap index representation, an answer of the bitmap index representation is generated, but to a question whose id element is not represented in a bitmap index representation, an answer of a text representation such as an integral value or a character string is generated.

Further, the configuration described above wherein an id element of a question and an answer to the question are represented by a bitmap index can be applied also to the broadcasting system of the second embodiment described hereinabove.

In the following, a configuration which uses a PDI-BA in the broadcasting system according to the second embodiment of the present invention described hereinabove is described.

Example of a Different Functional Configuration of the Server

First, an example of a different functional configuration of the server **11** in the broadcasting system **10** wherein metadata is represented by a bitmap index is described with reference to FIG. **58**.

The server **11** of FIG. **58** includes a transmission section **42**, a content accumulation section **45**, a content distributor **46**, a metadata distributor **413**, a PDI-S generator **431** and a PDI-S execution section **432**.

It is to be noted that, in the server **11** of FIG. **58**, like elements having like functions to those of the elements provided in the server **11** of FIG. **51** are denoted by like terms and like reference characters and overlapping description of them is suitably omitted herein to avoid redundancy.

In particular, the server **11** of FIG. **58** is different from the server **11** of FIG. **51** in that it includes the PDI-S generator **431** and the PDI-S execution section **432** in place of the PDI-Q generator **411** and the PDI-BA generator **412**.

The PDI-S generator **431** generates a PDI-S which is a script for obtaining a user side PDI-BA representative of answers of a user to questions regarding the liking of the user or viewer of the client **12**. The PDI-S generator **431** transmits

the generated PDI-S to the client **12** through the transmission section **42** and supplies the PDI-S to the PDI-S execution section **432**.

The PDI-S execution section **432** executes the PDI-S from the PDI-S generator **431** to generate a provider side PDI-BA representative of answers set by the provider side to the questions regarding the liking of the user of the client **12**. Then, the PDI-S execution section **432** supplies the generated provider side PDI-BA to the metadata distributor **413**.

Different Example of a Functional Configuration of the Client

Now, a different example of a functional configuration of the client **12** in the broadcasting system **10** wherein metadata is represented by a bitmap index is described with reference to FIG. **59**.

The client **12** of FIG. **59** includes a reception section **51**, a content reproduction section **55**, a content accumulation section **56**, a PDI-BA storage section **422**, a content filter **423**, a PDI-S execution section **441** and a log information storage section **442**.

It is to be noted that, in the client **12** of FIG. **59**, like elements having like functions to those of the elements provided in the server **12** of FIG. **52** are denoted by like terms and like reference characters and overlapping description of them is suitably omitted herein to avoid redundancy.

In particular, the client **12** of FIG. **59** is different from the client **12** of FIG. **52** in that it includes the PDI-S execution section **441** in place of the PDI-BA generator **421** and additionally includes the log information storage section **442**.

The PDI-S execution section **441** executes the PDI-S transmitted from the server **11** to generate a user side PDI-BA representative of answers of the user to the questions regarding the liking of the user of the client **12**, and supplies the generated user side PDI-BA to the PDI-BA storage section **422**. The PDI-S execution section **441** executes the PDI-S based on log information hereinafter described as occasion demands.

The log information storage section **442** stores log information representative of a behavior log of the user who owns the client **12**. The log information stored in the log information storage section **442** is read out by the PDI-S execution section **441** as occasion demands.

Example of the Content Transmission and Reception Processes

Now, content transmission and reception processes and a PDI-S execution process in the broadcasting system **10** configured from the server **11** of FIG. **58** and the client **12** of FIG. **59** are described with reference to flow charts of FIGS. **60** and **61**.

It is to be noted that the content transmission and reception processes and the PDI-S execution process represented by the flow charts of FIGS. **60** and **61** are basically similar to the content transmission and reception processes and the PDI-S execution process executed by the broadcasting system **10** of the second embodiment described hereinabove and represented by the flow charts of FIGS. **33** and **35** except that a user side PDI-BA and a provider side PDI-BA are generated in place of a user side PDI-A and a provider side PDI-A. Therefore, overlapping description of the content transmission and reception processes and the PDI-S execution process is omitted herein to avoid redundancy. It is to be noted that generation of a user side PDI-BA and a provider side PDI-BA is carried out similarly to generation of a user side PDI-BA and a provider side PDI-BA in the content transmission and reception processes described hereinabove with reference to the flow chart of FIG. **53**.

In short, according to the process described above, in the broadcasting system, on the provider side, the server generates a PDI-S for obtaining a user side PDI-BA to questions regarding the liking of the user, and the generated PDI-S is transmitted to the client terminal. Further, a provider side PDI-BA representative of an answer set by the provider side to the PDI-S is distributed as content metadata of a corresponding content. Consequently, content metadata which satisfies needs at the time other than content metadata prescribed by a standardization organization can be applied to a content. On the other hand, on the user side, the client terminal executes the PDI-S from the server to generate a user side PDI-BA and carries out matching between the generated user side PDI-A and the provider side PDI-BA from the server to determine whether or not the content distributed from the server should be acquired. Consequently, a content can be filtered with content metadata which satisfies needs at the time other than content metadata prescribed by a standardization organization. Accordingly, a content which satisfies current needs can be acquired.

Further, in the case where the questions defined by the PDI-S request answers of the logic values and the answer selection type, when a content is filtered on the client terminal, the user side PDI-BA and the provider side PDI-BA represented by bitmap indices are compared with each other. Therefore, the cost in regard to the CPU load and the memory use amount is lower than that in the case where the user side PDI-BA and the provider side PDI-BA of text representations are compared with each other. Thus, even if a great amount of contents are distributed at a time, the distributed contents can be filtered efficiently.

Further, since the client terminal can interact with the user by the PDI-S, even if a question set by the provider side has the substance which requires high interactivity, the client terminal can interact sufficiently with the user. Accordingly, since a user side PDI-BA which reflects the liking of the user with a high degree of accuracy can be generated, an accurate filtering condition can be obtained, and consequently, a content which satisfies needs at the time can be acquired with a higher degree of certainty.

Incidentally, also the broadcasting system of the present embodiment described hereinabove can be applied to a broadcasting system which broadcasts by the ATSC-M/H method.

Application Example to a Broadcasting System which Broadcasts by the ATSC-M/H System

In such an instance, the PDI-BA is placed into at least one of the "Service" fragment, "Schedule" fragment and "Content" fragment among the elements which configure the Service Guide shown in FIG. **22** as described hereinabove.

FIG. **62** illustrates details of a configuration of the "Service" fragment. Referring to FIG. **62**, a "PDI-BA" element is newly added to the "PrivateExt" element defined on the lowermost stage in the "Service" fragment illustrated in FIG. **62**, and the PDI-BA is placed into the "PDI-BA" element. More particularly, for example, a bitmap index of the "PDI-BA" element which is represented in bytes as <xs:element name="PDI-BA" type="xs:base64Binary" xmlns: xs="http://www.w3.org/2001/XMLSchema"/> by the XML schema is encoded as base64Binary.

FIG. **63** illustrates details of a configuration of the "Schedule" fragment. Referring to FIG. **63**, a "PDI-BA" element is newly added to the "PrivateExt" element defined on the lowermost stage in the "Schedule" fragment illustrated in FIG. **63**, and the PDI-BA is placed into the "PDI-BA" element. More particularly, for example, a bitmap index of the "PDI-BA" element which is represented in bytes as <xs:element name="PDI-BA" type="xs:base64Binary" xmlns:

xs="http://www.w3.org/2001/XMLSchema"/> by the XML schema is encoded as base64Binary.

FIG. **64** illustrates details of a configuration of the "Content" fragment. Referring to FIG. **64**, a "PDI-BA" element is newly added to the "PrivateExt" element defined on the lowermost stage in the "Content" fragment illustrated in FIG. **64**, and the PDI-BA is placed into the "PDI-BA" element. More particularly, for example, a bitmap index of the "PDI-BA" element which is represented in bytes as <xs:element name="PDI-BA" type="xs:base64Binary" xmlns: xs="http://www.w3.org/2001/XMLSchema"/> by the XML schema is encoded as base64Binary.

It is to be noted that the PDI-Q or PDI-S is placed into the "Interactivity Data" fragment from among the elements which configure the Service Guide illustrated in FIG. **22** as described hereinabove.

Further, the broadcasting system of the present embodiment can be applied also to a broadcasting system which carries out NRT broadcasting.

Application Example of a Broadcasting System which Carries Out NRT Broadcasting

In such a case, the PDI-BA, that is, the provider side PDI-BA, transmitted from the server **11** to the client **12** in the broadcasting system **10** described above is placed into and transmitted together with "PDI descriptor" newly prescribed in SMT or NRT-IT (FIG. **29**).

FIG. **65** illustrates an example of the syntax of "PDI descriptor." In FIG. **65**, each of the descriptors described is defined together with a bit number (No. of bits) and a format (Format).

According to the syntax illustrated in FIG. **65**, the PDI-BA is described in the descriptor "PDI-BA" of variable bits.

It is to be noted that naturally the broadcasting system of the present embodiment can be applied to a broadcasting system which broadcasts by the ATSC-M/H system described hereinabove or a broadcasting system which carries out NRT broadcasting by a method other than an existing broadcasting system.

While the series of processes described above can be executed by hardware, it may otherwise be executed by software. In the case where the series of processes is executed by software, a program which constructs the software is installed from a program recording medium into a computer incorporated in hardware for exclusive use or, for example, a personal computer for universal use which can execute various functions by installing various programs.

The program recording medium in which a program which is installed in a computer and can be placed into a state in which it can be executed by the computer is stored is configured from, as seen in FIG. **2**, a removable medium **31** which is a package medium formed from a magnetic disk (including a flexible disk), an optical disk (including a CD-ROM (Compact Disc-Read Only Memory), a DVD (Digital Versatile Disc) and an optical magnetic disc) or a semiconductor memory, the ROM **22** in which the program is stored temporarily or permanently or a hard disk or the like which configures the storage section **28**. Storage of the program into the program recording medium is carried out through a wire or wireless communication medium such as a local area network, the Internet or a digital satellite broadcast through the communication section **29** which is an interface of a router, a modem or the like as occasion demands.

It is to be noted that, in the present specification, the steps which describe the program may be but need not necessarily be processed in a time series in the order as described, and include processes which are executed in parallel or individually without being processed in a time series.

Further, in the present specification, the term "system" is used to represent an entire apparatus composed of a plurality of apparatus.

While preferred embodiments of the present invention have been described using specific terms, such description is for illustrative purpose only, and it is to be understood that changes and variations may be made without departing from the spirit or scope of the following claims.

What is claimed is:

1. A transmission apparatus for distributing a content item to a client, comprising:

question generation means for generating question information representative of a question regarding one or a combination of preference, demographic, and interest information of a user of the client; and

transmission means for

transmitting the question information to the user, the question information being used to generate user answer information that is representative of an answer to the question input by the user in response to the question represented by the question information, the user answer information being stored in a memory and retrieved to filter the content item, and

transmitting the content item together with provider side answer information of an answer to the question set by a provider, the provider side answer information being associated with the content item, wherein

the provider side answer information is compared with the user answer information stored in the memory to filter the content item based on whether the provider side answer information matches the user side answer information, and

the user answer information has a same predetermined format as the provider side answer information.

2. A transmission method of a transmission apparatus for distributing a content item to a client, comprising:

generating question information representative of a question regarding one or a combination of preference, demographic, and interest information of a user of the client;

transmitting the question information to the user, the question information being used to generate user answer information that is representative of an answer to the question input by the user in response to the question represented by the question information, the user answer information being stored in a memory and retrieved to filter the content item; and

transmitting the content item together with provider side answer information of an answer to the question set by a provider, the provider side answer information being associated with the content item, wherein

the provider side answer information is compared with the user answer information stored in the memory to filter the content item based on whether the provider side answer information matches the user side answer information, and

the user answer information has a same predetermined format as the provider side answer information.

3. A reception apparatus for acquiring a content item distributed from a server, comprising:

answer generation means for generating, in response to question information representative of a question regarding one or a combination of preference, demographic, and interest information of a user and transmitted from the server to said reception apparatus, user side answer information of an answer of the user to the question;

a memory configured to store the user side answer information, which is retrieved to filter the content item;

receiving means for receiving from the server the content item together with provider side answer information of an answer to the question set by a provider, the provider side answer information having a same predetermined format as the user side answer information and being associated with the content item; and

matching means for performing a comparison between the user side answer information and the provider side answer information transmitted from the server to said reception apparatus to filter the content item, distributed from the server, based on whether the provider side answer information matches the user side answer information.

4. A reception method of a reception apparatus for acquiring a content item distributed from a server, comprising:

generating, in response to question information representative of a question regarding one or a combination of preference, demographic, and interest information of a user and transmitted from the server to the reception apparatus, user side answer information of an answer of the user to the question;

storing the user side information in a memory;

receiving from the server the content item together with provider side answer information of an answer to the question set by a provider, the provider side answer information having a same predetermined format as the user side answer information and being associated with the content item; and

performing, by a processor of the reception apparatus, a comparison between the user side answer information and the provider side answer information transmitted from the server to the reception apparatus to filter the content item, distributed from the server, based on whether the provider side answer information matches the user side answer information.

5. A transmission and reception system, comprising:

a transmission apparatus adapted to distribute a content item; and

a reception apparatus adapted to filter the content item distributed from the transmission apparatus;

said transmission apparatus including

a question generator configured to generate question information representative of a question regarding one or a combination of preference, demographic, and interest information of a user of said reception apparatus, and

a transmitter configured to

transmit the question information to the user, and

transmit the content item together with provider side answer information of an answer to the question set by a provider, the provider side answer information being associated with the content item;

said reception apparatus including

an answer generator configured to generate user side answer information of an answer of the user to the question represented by the question information in response to the question information transmitted from the transmission apparatus,

a memory configured to store the user side answer information, which is retrieved to filter the content item;

a receiver configured to receive from the server the content item together with the provider side answer information of the answer to the question set by the provider, the provider side answer information having a same predetermined format as the user side answer information; and

a processor configured to perform a comparison between the user side answer information and the provider side answer information transmitted from the transmission apparatus to filter the content item, distributed from the transmission apparatus, based on whether the provider side answer information matches the user side answer information.

6. A transmission apparatus for distributing a content item to a client, comprising:

a question generator configured to generate question information representative of a question regarding one or a combination of preference, demographic, and interest information of a user of the client; and

a transmitter configured to

transmit the question information to the user, the question information being used to generate user answer information that is representative of an answer to the question input by the user in response to the question represented by the question information, the user answer information being stored in a memory and retrieved to filter the content item, and

transmit the content item together with provider side answer information of an answer to the question set by a provider, the provider side answer information being associated with the content item, wherein

the provider side answer information is compared with the user answer information stored in the memory to filter the content item based on whether the provider side answer information matches the user side answer information, and

the user answer information has a same predetermined format as the provider side answer information.

7. The transmission apparatus according to claim **6**, further comprising a metadata generator configured to generate metadata including the provider side answer information as metadata of the content item corresponding to the answer to the question set by the provider;

wherein said transmitter is configured to transmit the metadata to the client.

8. The transmission apparatus according to claim **6**, wherein the transmitter transmits a digital television broadcast signal including the content item and the provider side answer information.

9. The transmission apparatus according to claim **6**, wherein

the transmitter is configured to transmit the content item together with the provider side answer information to a reception apparatus, and

the content item associated with the provider side answer information is stored in the memory when the reception apparatus determines the provider side answer information matches the user side answer information.

10. A reception apparatus for acquiring a content item distributed from a server, comprising:

an answer generator configured to generate, in response to question information representative of a question regarding one or a combination of preference, demographic, and interest information of a user and transmitted from the server to said reception apparatus, user side answer information of an answer of the user to the question;

a memory configured to store the user side answer information, which is retrieved to filter the content item;

a receiver configured to receive from the server the content item together with provider side answer information of an answer to the question set by a provider, the provider side answer information having a same predetermined format as the user side answer information and being associated with the content item; and

a matcher configured to perform a comparison between the user side answer information and the provider side answer information transmitted from the server to said reception apparatus to filter the content item, distributed from the server, based on whether the provider side answer information matches the user side answer information.

11. The reception apparatus according to claim **10**, wherein said processor performs the comparison to filter the content item corresponding to metadata including the provider side answer information.

12. The reception apparatus according to claim **10**, wherein the receiver is configured to receive a digital television broadcast signal including the content item and the provider side answer information.

13. The reception apparatus according to claim **10**, further comprising:

an accumulator configured to store the content item in the memory when the matcher determines that the provider side answer information associated with the content item matches the user side answer information.

* * * * *

UNITED STATES PATENT AND TRADEMARK OFFICE

CERTIFICATE OF CORRECTION

PATENT NO. : 8,875,169 B2
APPLICATION NO. : 13/071238
DATED : October 28, 2014
INVENTOR(S) : Yasuaki Yamagishi

It is certified that error appears in the above-identified patent and that said Letters Patent is hereby corrected as shown below:

On the Title Page, Item (54) and in the Specification, Column 1, Line 1-3, the Title is incorrect. Item (54) and Column 1, Line 1-3 should read:

-- TRANSMISSION AND RECEPTION APPARATUSES, METHODS, AND SYSTEMS FOR FILTERING CONTENT --

Signed and Sealed this
Nineteenth Day of May, 2015

Michelle K. Lee

Michelle K. Lee
Director of the United States Patent and Trademark Office