Dec. 24, 1946. E. J. BAUMGARDNER 2,413,135

ELECTRIC SWITCH

Filed Dec. 12, 1944

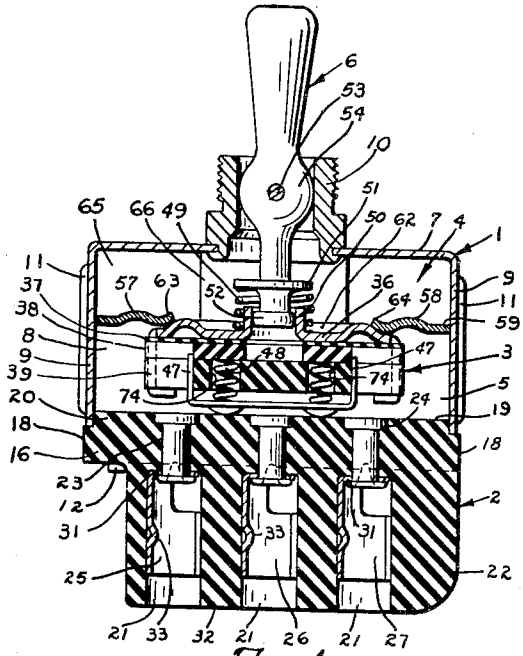

FIG. 1.

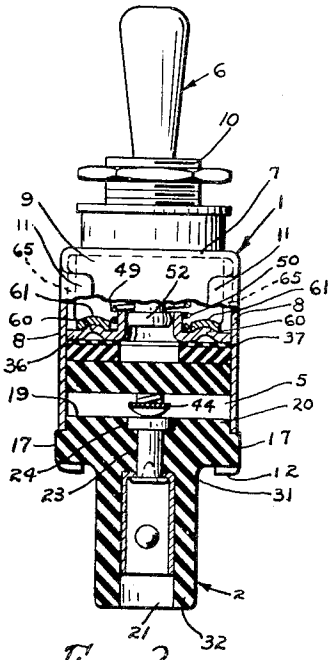

FIG. 2.

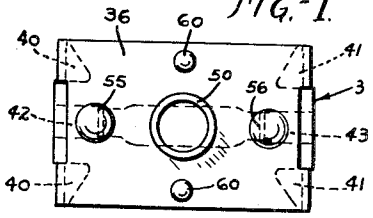

FIG. 3.

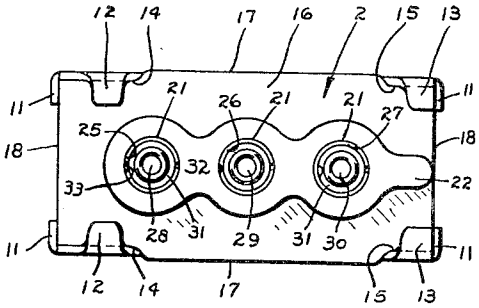

FIG. 4.

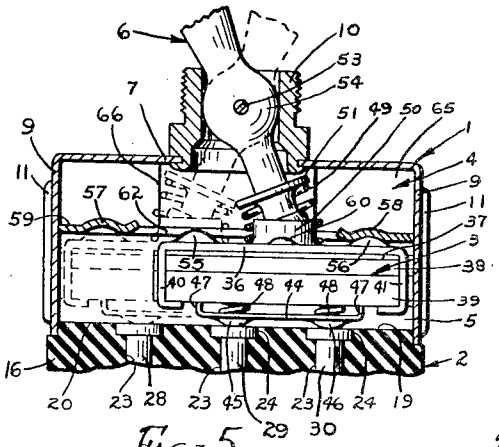

FIG. 5.

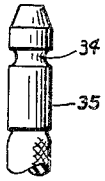

FIG. 7.

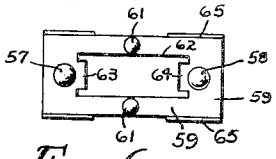

FIG. 6.

INVENTOR.
EARL J. BAUMGARDNER
BY
Charles S. Penfold
ATTORNEY

Patented Dec. 24, 1946

2,413,135

UNITED STATES PATENT OFFICE

2,413,135

ELECTRIC SWITCH

Earl J. Baumgardner, Marion, Iowa, assignor to H. A. Douglas Mfg. Co., Bronson, Mich., a corporation of Michigan

Application December 12, 1944, Serial No. 567,810

4 Claims. (Cl. 200—16)

1

This invention relates generally to electric switches and more particularly has to do with a relatively small lever actuated switch preferably adapted for installation on the instrument panel or other mounting in an automotive vehicle for controlling a plurality of electric circuits.

One important object of the invention is to provide an electric switch embodying improved means whereby to prevent undue tilting of the actuated means or bridge means of the switch.

Another object is to provide means for indexing or locating the switch back or contact carrier with respect to the switch housing, the indexing means also serving to reinforce a portion or portions of the carrier.

A further object is to provide improved means for predetermining the on and off positions of the switch, and means for effecting an efficient snap action in connection with said positions.

A further object is to provide an improved connection between the actuated means and the operating means or lever of the switch.

Moreover, an important object is to provide a switch consisting of very few parts which may be economically manufactured and assembled on a production basis.

Other objects and advantages of the invention will appear after reading the description hereinafter set forth in conjunction with the drawing annexed hereto wherein various parts of the switch are designated by numerals.

In the drawing:

Figure 1 is a vertical section taken through the switch showing the switch in an inoperative or off position;

Figure 2 is an end view of the switch with portions thereof broken away whereby to better illustrate certain details of construction;

Figure 3 is a top view of the actuated means and associated structure;

Figure 4 is a bottom view of the switch;

Figure 5 is a vertical section similar to Figure 1 showing the switch in an on or operative position;

Figure 6 is a top plan view, on a reduced scale, of the guide means; and

Figure 7 is a side view of a plug conductor terminal adapted for cooperation with each of the terminal receptacles forming a part of the contact means of the switch.

The switch, among other things, generally includes a housing 1, a switch back or carrier 2 of insulating material carrying contact means, actuated means generally designated 3 carrying bridge means adapted for cooperation with the

2

contact means carried by the switch back, guide means 4 spaced from the switch back to provide a chamber 5 within which the actuated means 3 is movable and held substantially against tilting, and operating means 6 in the form of a lever connected to the actuated means for driving the latter.

Considering the structure more in detail, the housing 1 includes a bottom wall 7, side walls 8, and end walls 9. The bottom wall 7 carries a tubular bearing member 10 which is secured in place by providing the member with a portion which projects through a circular opening formed in the wall and flanging over the portion against the inner surface of the wall whereby to permanently secure the member in place against rotation. The switch is preferably adapted for installation in a panel or other mounting with the threaded part of the bearing member 10 projecting forwardly through a hole provided therefor in the panel so that a nut may be secured to the bearing for detachably securing the switch in place with the outer extremity of the lever 6 extended forwardly for easy manipulation by the operator of a vehicle. The bearing is preferably provided with means, not shown, cooperating with the mounting whereby to prevent rotation of the switch with respect to the mounting.

The side walls 8 of the housing are preferably provided with continuations 11 which are turned inwardly toward each other and against the outer surface of the end walls 9 whereby to reinforce the housing. Each side wall is further provided with a pair of fingers 12 and 13 which cooperate with suitable notches 14 and 15, respectively, provided therefor in the sides of the rectangular base portion 16 of the switch back 2 and are clinched over and against the outer surface of the portion 16 as clearly illustrated in Figure 4 for permanently securing the switch back in place. The fingers and notches are of such a character that the switch back can be assembled with the housing in only one position.

The switch back is preferably constructed from molded insulating material such as Bakelite. The sides of the base portion 16 are preferably provided with outwardly extending longitudinal abutments 17 and the ends with transverse abutments 18. All of these abutments are set back or stepped from the inner face 19 of the base portion 16 so as to provide a generally rectangular boss portion 20 which projects into the interior of the housing 1 with the abutments 17 and 18 engaging the free marginal edges of

the side walls 8 and end walls 9 of the housing, respectively, as clearly illustrated in Figures 1 and 2 to form a good tight durable connection sealing off the open side of the switch housing.

The back is provided with a rearwardly extending enlargement integral with the base portion 16. This enlargement is preferably composed of three connected circular portions, each portion having a cylindrical opening or pocket 21. The openings are equally spaced apart on the medial line of the back. One of the circular portions is preferably provided with a projection 22 extending along a side thereof so that the person assembling the switch can quickly determine the proper position the switch back is to assume on the housing. This projection thus serves as indexing means and at the same time reinforces the enlargement. The back is also provided with a plurality of holes 23 which extend through the base portion and communicatively connect with the openings 21, as clearly illustrated in Figures 1 and 2. The inner planar face 19 of the boss portion 20 is provided with a plurality of round recesses 24. Generally tubular split cylindrical terminal receptacles 25, 26, and 27 are disposed in the openings and are secured in place by rivet contacts 28, 29, and 30, with the shank portions of the rivets extending through the holes 23, and through apertures provided therefor in the transverse base portions 31 of the receptacles, the ends of the rivets being flanged over against the base portions whereby to permanently secure the receptacles and rivets to each other and to the switch back. As clearly illustrated, the heads of the rivet contacts are inset in the recesses 24 so that their contacting surfaces are disposed substantially flush with the inner face 19 of the back. The terminal receptacles are substantially identical in character and each is preferably of a length so that the outer ends of the receptacles are inset with respect to the outer surface 32 of the enlargement. Each receptacle is preferably provided with a detent 33 which is adapted to cooperate with a cove or groove 34 provided in the plug conductor terminal 35 when the terminal is seated in the receptacle. When a terminal is properly seated in a receptacle it is resiliently held in place and substantially concealed so that no metal can come in contact therewith or engage another terminal in an adjacent opening or pocket to cause a short circuit. The back is unique in character in that the contact means in their entireties are inset and substantially concealed from view.

The actuated means 3, bridge carrier, and the bridge means carried by the carrier will now be described. The actuated means in part includes a generally rectangular plate 36 to which is secured the bridge carrier consisting of three superimposed plies of insulating material 37, 38, and 39. A pair of depending fingers 40 and a pair of spaced depending fingers 41 formed adjacent the respective ends of the plate project through suitable notches provided therefor in the plies constituting the bridge carrier and are bent under and against the lower ply 39 of insulating material to secure the parts together as a unit. The carrier is preferably constructed of a plurality of plies in order to reduce the cost of manufacture and at the same time provide a set up which may be easily and quickly modified to take one or a plurality of bridge means. The plies may be of the same thickness, but in the present embodiment of the invention, the top ply 37 is thinner than the intermediate ply 38, and the latter thinner than the lower ply 39.

The carrier is provided with a pair of square shaped notches 42 and 43 adjacent the ends of the carrier between the pairs of fingers 40 and 41, respectively, the notches being formed by corresponding apertures formed in the plies 38 and 39. The carrier is also provided with two round pockets 74 formed by corresponding apertures in the lower ply 39. The pockets are disposed between and in alignment with the notches 42 and 43.

The bridge means is preferably made in the form of a relatively narrow elongated metal plate 44 provided with round boss contact portions 45 and 46 adjacent its extremities. When the actuated means is thrown by the lever to the left from its center or intermediate position as illustrated in Figure 5, the pair of boss contact portions 45 and 46 of the bridge means will engage the contact surfaces of the pair of rivet contact means 29 and 30, respectively, to close a first electrical circuit, and when thrown to the right, the contact means 45 and 46 will engage the rivet contacts 28 and 29, respectively, to close a second circuit and open the first. The ends of the bridge means are narrower than the central portions from which the boss contact portions project, and are provided with fingers which cooperate with at least a part of the bridge carrier. More specifically, the fingers 47 formed on the bridge project into the notches 42 and 43. Attention is directed to the fact that the thin upper ply 37 of insulating material backs against the plate portion 36 of the actuated means and is not interrupted by any recesses for the fingers of the bridge means or with pockets corresponding to the pockets for helical springs 48. This arrangement prevents the fingers of the bridge means from engaging the actuated means to cause a short circuit.

It will be noted that the lower ply 39 of insulating material forming a part of the bridge carrier is the only ply provided with the round pockets 71 for the springs 48. The springs are well seated in the pockets and the inner ends abut the intermediate ply 38 of insulating material. Obviously, if found desirable corresponding holes or pockets could be provided in the ply 38 so that the inner ends of the springs would abut the ply 37. In any event, provision must be made whereby the springs will not engage the actuated means to cause a short circuit. The outer ends of the springs seat in the depressions formed by the boss contact portions of the bridge means. The bridge means is thus well balanced and urged by the springs in a direction toward the contact means carried by the carrier 2. The springs also function to urge the bridge carrier and actuated means as a unit in an opposite direction against the guide means generally designated 4 and the guide means against the bottom wall 7 of the switch housing. Attention is also directed to the important fact that the springs also operate in conjunction with a larger helical spring 49 associated with the actuated means 4 and the operating means or lever 6 whereby to eliminate vibration and assist in maintaining the parts in their proper operative relationship to obtain the desired action and results.

The plate portion 36 of the actuated means 3 is provided with an upstanding tubular bearing 50 centrally located on the medial line of the plate portion. The helical spring 49 surrounds the tubular bearing 50, with one end of the spring nor-

mally bearing against the plate portion 36 of the actuated means and its other end against an enlarged radial annular flange 51 provided adjacent the inner extremity of the lever 6. The inner end of the lever is provided with an annular portion 52, the periphery of which is rounded for camming contact with the inner wall or surface of the tubular bearing. That portion of the lever between the enlarged annular portion 51 and the annular portion 52 is such that sufficient clearance is provided when the lever is pivoted on the pivot 53 projecting through the bearing 10 and through the round intermediate enlargement 54 of the lever. To provide for additional clearance, the plies 37 and 38 of insulating material are provided with openings, as indicated in Figures 1 and 2. The lever and spring 49 are the last parts of the switch to be assembled, the spring being inserted through the bearing 10 in advance of the lever, and when the two are located the pivot pin 53 is driven into place.

The plate portion 36 of the actuated means is also provided with a pair of upstanding round projections 55 and 56 located on the medial line, one on either side of and equally spaced from the bearing 50. These projections 55 and 56 are adapted to cooperate with a pair of depressions forming detents 57 and 58 provided in the base portion 59 of the guide means and assist in locating and holding the actuated means in its operative positions. The plate portion 36 is further provided with a pair of relatively small upstanding round boss portions 60 disposed in a line transverse to the said medial line with one on either side and equally spaced from the bearing 50. These boss portions 60 are received in indentations forming detents 61 for holding the actuated means in an off or inoperative position, as illustrated in Figure 1, and otherwise slidably engage the bottom surface of the base portion 59 of the guide means whereby to assist in eliminating friction between the actuated means and the guide means when the actuated means is moved longitudinally within the housing from any of its selected positions. The base 59 of the guide means is provided with an elongated rectangular clearance aperture 62 for the tubular bearing 50, helical spring 49, and the inner operating extremity of the lever 6. The material adjacent each end of the clearance aperture 62 is preferably upturned so as to provide tongue-like cam portions 63 and 64 which are engaged by the projections 55 and 56 whereby to assist in directing the latter into the detent pockets 57 and 58. The cam portions 63 and 64 are so constructed and arranged that when the switch is in an inoperative position the projections 55 and 56 are disposed in the clearance aperture and engage the tongue like cam portions 63 and 64 and assist the bosses 60 and detent pockets 61 to hold the actuated means in said inoperative position. The guide means 4 is generally channel in shape and includes the generally rectangular planar portion 59 just referred to and a pair of side walls 65, the latter of which are interrupted by a pair of corresponding cutouts 66 adjacent the detent pockets 61 so that the material within which the detent 61 are formed is relatively narrow permitting same to yield to a very slight degree whereby to further assist in providing a positive acting snap switch. The guide means is of a size to more or less snugly fit in the switch housing so that there is no longitudinal movement of same in the housing. The free longitudinal marginal edges of the side walls of the guide means are caused

to bear against the bottom wall 7 of the switch housing by the helical springs 48. The spring 49 which surrounds the bearing 50 primarily serves to eliminate vibration between the operating lever and the actuated means but also functions to assist in throwing the actuated means to its various positions.

In view of the foregoing, it should be evident that when the switch lever is in the position illustrated in Figures 1 and 2, the boss contact portions 45 and 46 of the bridge means 44 will engage the inner planar face 19 of the switch back. When sufficient pressure is applied to the operating lever in a left direction the bosses 60 will ride out of the detent pockets 61 and the projection 56 will ride against the tongue-like cam portion 64 and into the detent pocket 58. During this transitory movement the actuated means will tilt very slightly but will be held against substantial tilting. In other words, the guide means functions to hold the actuated means against undue tilting and the operating lever from becoming disconnected from the bearing 50 when the switch is operated. As clearly illustrated in Figure 5, when the projection 56 is in the seat or pocket 58 and the right hand extremity of the actuated means is engaging one end of the housing, the boss contact portions 45 and 46 engage the rivet contact means 29 and 30 to control one electrical circuit. When sufficient pressure is applied to the lever in a reverse direction the projection 56 will ride out of the pocket 58 and the tongue-like cam portion 64 will assist in throwing the actuated means back to a neutral or inoperative position as illustrated in Figures 1 and 2, whereupon the projections 55 and 56 engage the cam portions 63 and 64 and the boss portions 60 will be received in the detent pockets 61. If greater force is applied to the operating lever 6 in this reverse movement the actuated means may be thrown completely over so that the projection 55 will strike the cam portion 64 and ride into the pocket 57 whereupon the boss contact portions 45 and 46 of the bridge means will engage the rivet contact means 28 and 29 to close another electrical circuit. The same action takes place when the actuated means is thrown back to close the first circuit as when throwing from the first circuit closing position to the second circuit closing position. Attention is also directed to the fact that the bridge means 44 will tilt or laterally adjust itself to the rivet contact means depending on the position of the actuated means.

Having thus described my invention, it is obvious that various modifications may be made in the same without departing from the spirit of the invention; and, therefore, I do not wish to be understood as limiting myself to the exact form, construction, arrangement, and combination of parts herein shown and described.

I claim:

1. An electric switch including, a housing, guide means disposed in said housing providing a chamber, a carrier carrying contact means carried by said housing, actuated means carrying bridge means disposed in said chamber and operating means for moving said actuated means so that the bridge means may engage said contact means, said guide means being provided with an opening, and said actuated means being provided with means cooperable with the opening whereby to predetermine at least one position of said actuated means, said guide means being further provided with locating means cooperable with the

said means on said actuated means whereby to locate at least another position of said actuated means.

2. An electric switch including, a housing, guide means disposed in said housing providing a chamber, a carrier carrying contact means carried by said housing, actuated means carrying bridge means disposed in said chamber and means for operating said actuated means in said chamber so that said bridge means may engage said contact means, said guide means being provided with an opening, and said actuated means being provided with means cooperable with said opening for maintaining said switch in an open circuit position, said guide means also being provided with means cooperable with the said means on said actuated means for holding said actuated means in either of two circuit closed positions.

3. An electric switch including, a housing, guide means disposed in said housing providing a chamber, a carrier carrying contact means carried by

said housing, actuated means carrying bridge means disposed in said chamber and operating means for moving said actuated means so that the bridge means may engage said contact means, said guide means being provided with an opening, and said actuated means being provided with means cooperable with the opening whereby to predetermine at least one position of said actuated means.

4. Guide means for an electric switch including, a channel part, the base of said channel being provided with a clearance opening for the operating means of the switch, the material adjacent the extremities of said opening being fashioned to provide locating means for the actuated means of the switch, and said base portion also being provided with means adapted to be engaged by the actuated means for predetermining certain positions of said actuated means.

EARL J. BAUMGARDNER.