(12) UK Patent Application (19) GB (11) 2 374 776 (13) A

(43) Date of A Publication 23.10.2002

(21) Application No 0109626.2

(22) Date of Filing 19.04.2001

(51) INT CL[7]
G06T 15/00

(52) UK CL (Edition T)
H4T TDGA

(56) Documents Cited
GB 2332348 A
www.calstatela.edu/ats/real/develop/realtext3d.htm

(58) Field of Search
UK CL (Edition S) H4T TBBA TBEC TDGA TDXX
Online: WPI, EPODOC, JAPIO, Internet

(71) Applicant(s)
Discreet Logic Inc
(Incorporated in Canada)
10 Duke Street, Montreal, Quebec H3C 2L7, Canada

(72) Inventor(s)
Juan Pablo Di Lelle

(74) Agent and/or Address for Service
Atkinson Burrington
25-29 President Buildings, President Way,
SHEFFIELD, S4 7UR, United Kingdom

(54) Abstract Title
3D Text objects

(57) A method and apparatus are provided for generating three-dimensional text within images composited in real time, by means of generating three-dimensional text from one or a plurality of text formatting templates. Storage means stores said text formatting templates and instructions for processing means. Said instructions configure said processing means to define a text formatting template. Said instructions further configure said processing means to equip said defined text formatting template with three-dimensional preferences with which to format text to be included in said template and subsequently equip said defined text formatting template with said text. Said instructions finally configure said processing means to render said two-dimensional template including said text formatted according to said three-dimensional preferences.

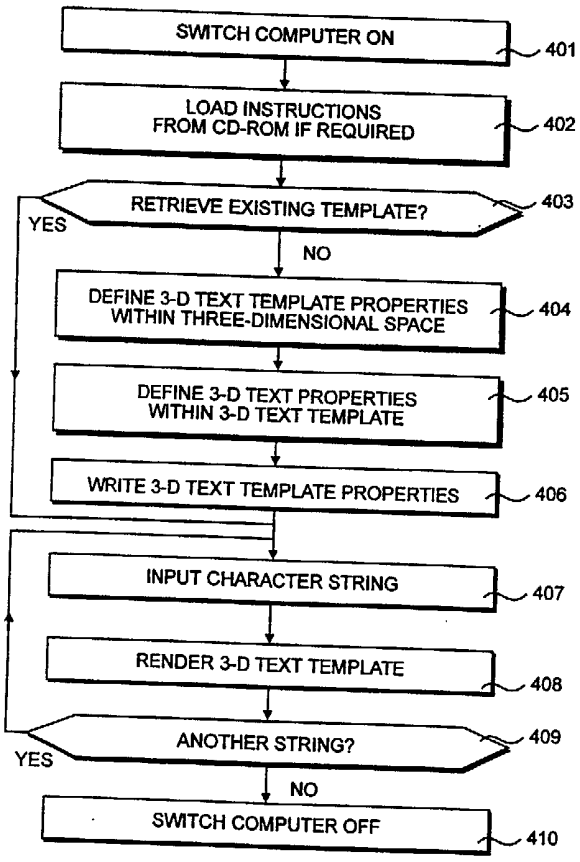

Figure 4

GB 2 374 776 A

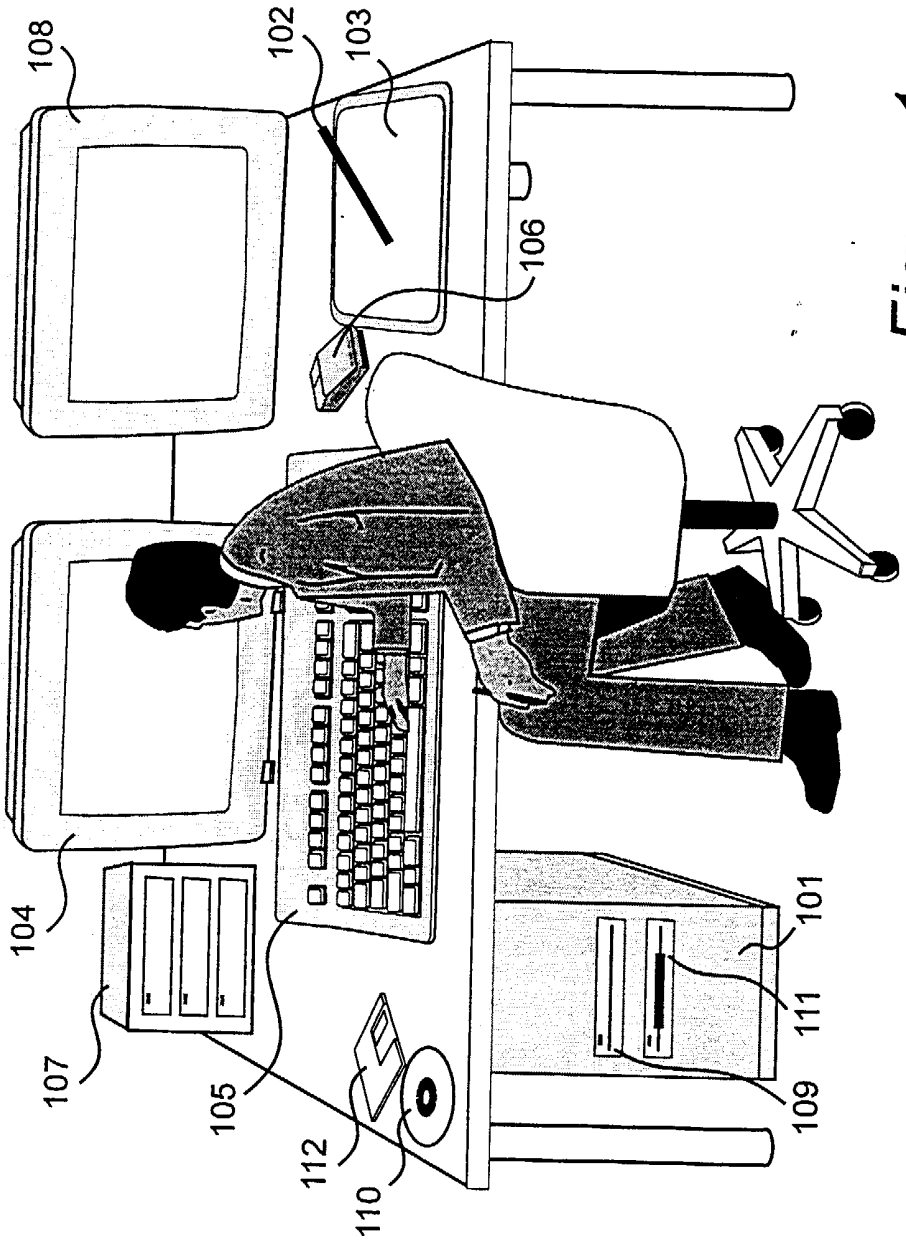

Figure 1

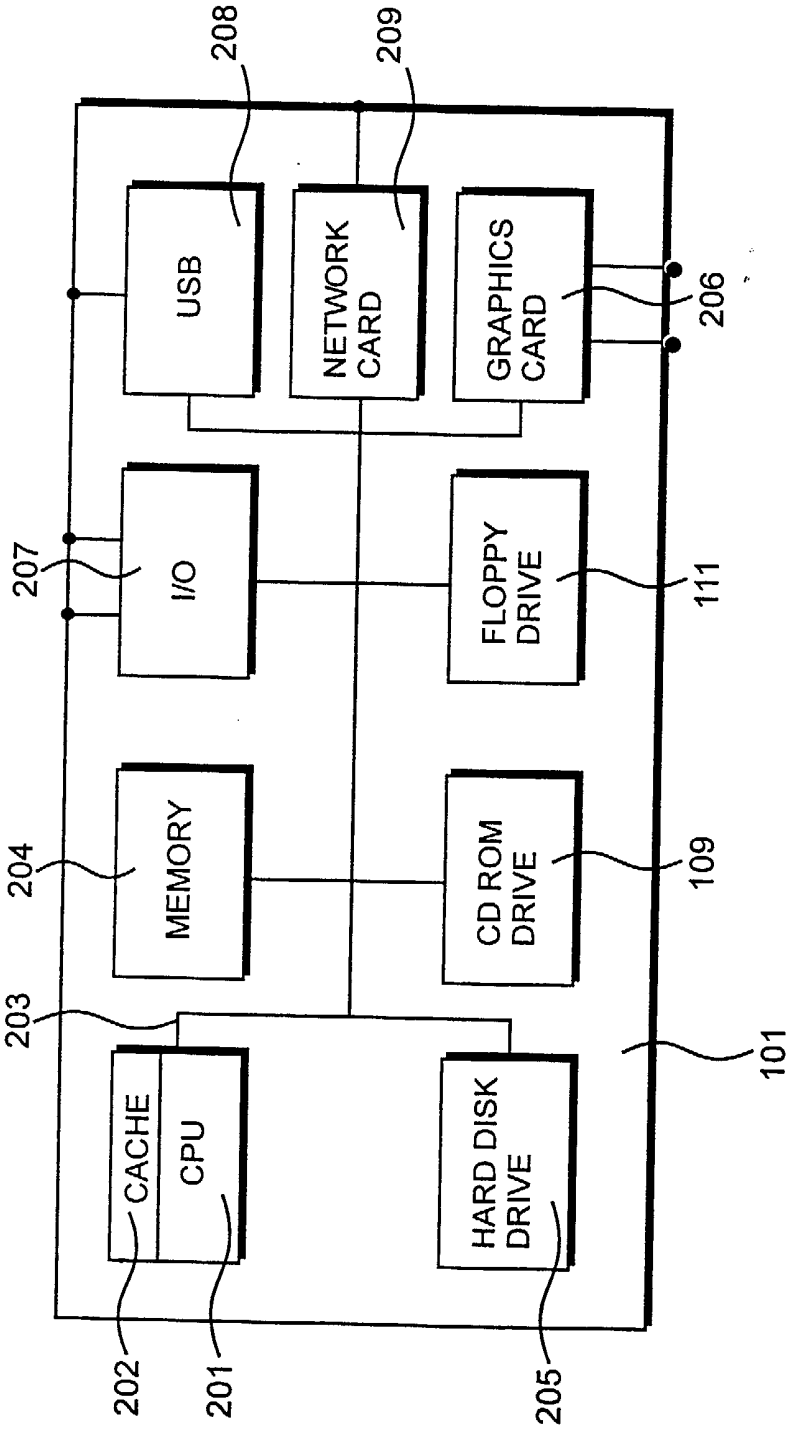
208
209
USB
NETWORK CARD
GRAPHICS CARD
206
207
I/O
FLOPPY DRIVE
111
204
MEMORY
CD ROM DRIVE
109
203
CACHE
CPU
HARD DISK DRIVE
101
202
201
205

Figure 2

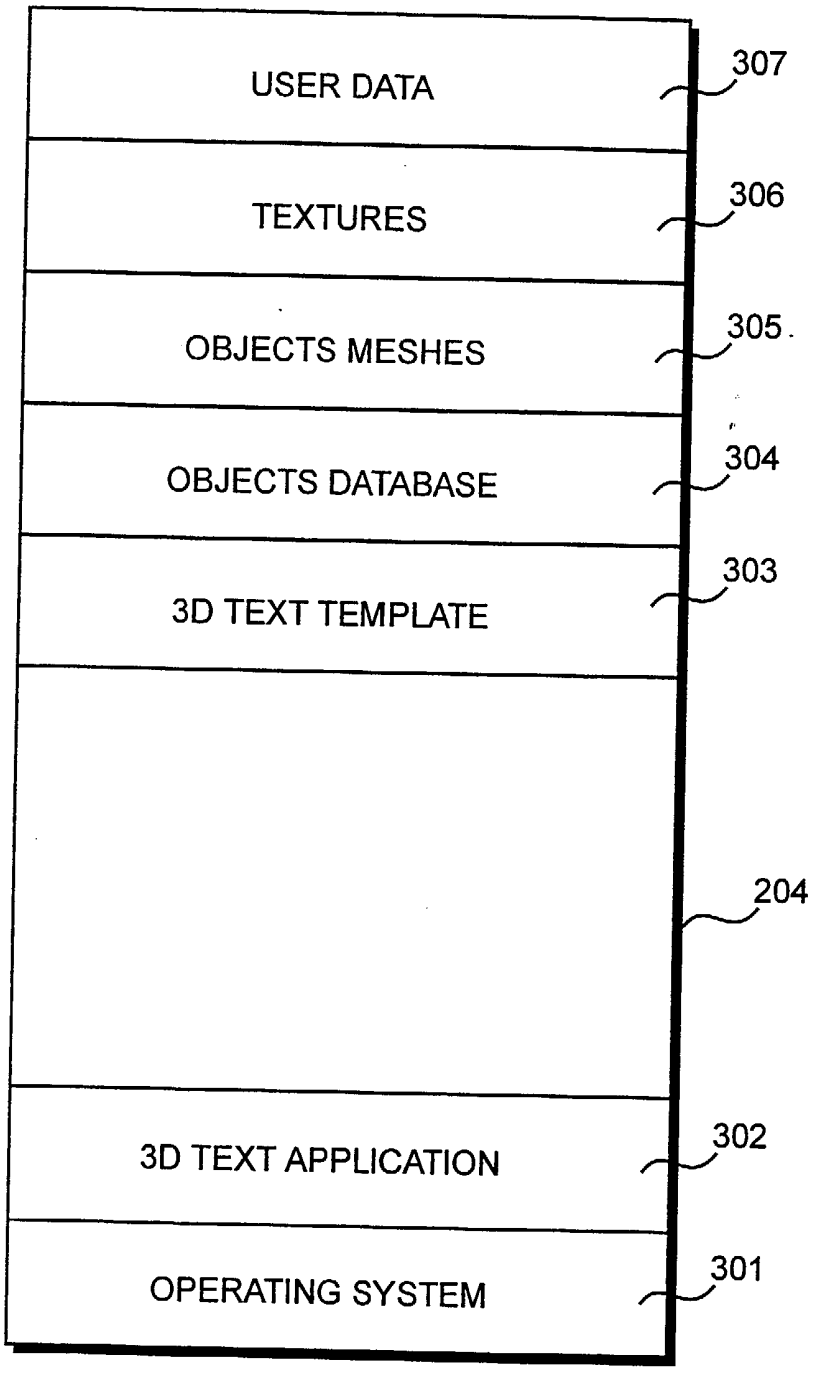
USER DATA
307
TEXTURES
306
OBJECTS MESHES
305
OBJECTS DATABASE
304
3D TEXT TEMPLATE
303
204
3D TEXT APPLICATION
302
OPERATING SYSTEM
301

Figure 3

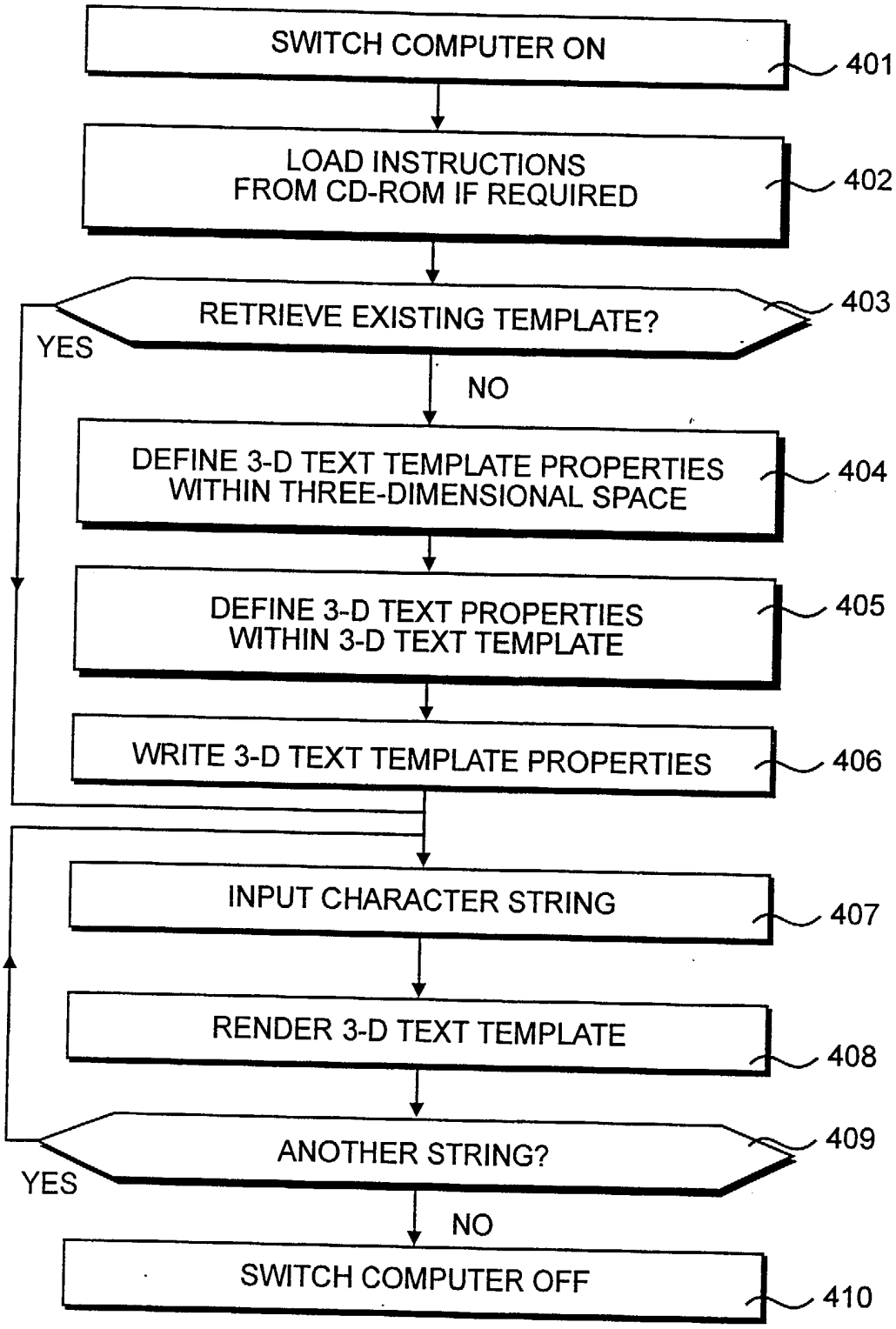
SWITCH COMPUTER ON
401
LOAD INSTRUCTIONS FROM CD-ROM IF REQUIRED
402
RETRIEVE EXISTING TEMPLATE?
403
YES
NO
DEFINE 3-D TEXT TEMPLATE PROPERTIES WITHIN THREE-DIMENSIONAL SPACE
404
DEFINE 3-D TEXT PROPERTIES WITHIN 3-D TEXT TEMPLATE
405
WRITE 3-D TEXT TEMPLATE PROPERTIES
406
INPUT CHARACTER STRING
407
RENDER 3-D TEXT TEMPLATE
408
ANOTHER STRING?
409
YES
NO
SWITCH COMPUTER OFF
410

Figure 4

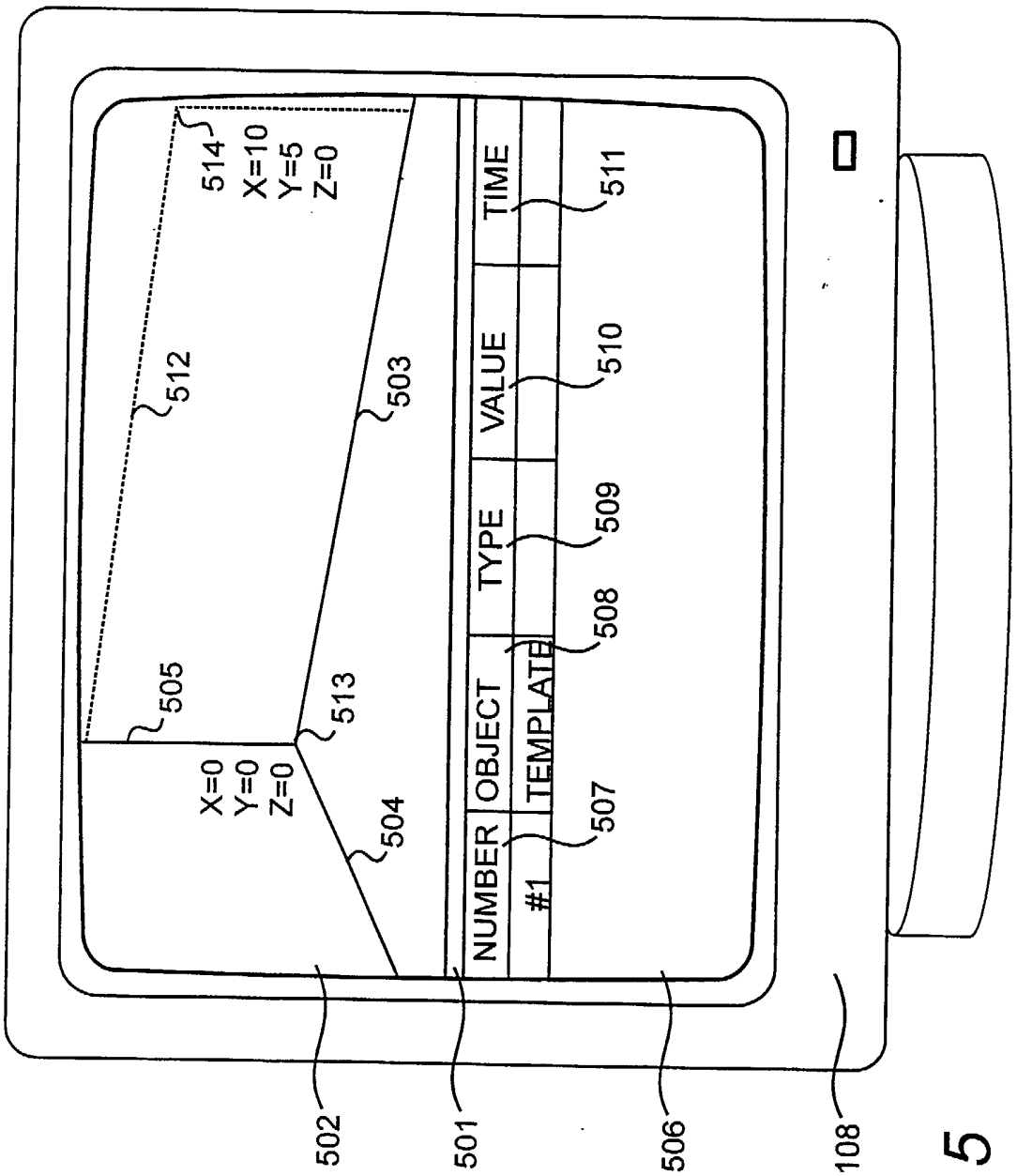
514
X=10
Y=5
Z=0
512
503
505
513
X=0
Y=0
Z=0
504
NUMBER
OBJECT
TEMPLATE
TYPE
VALUE
TIME
#1
507
508
509
510
511
502
501
506
108

Figure 5

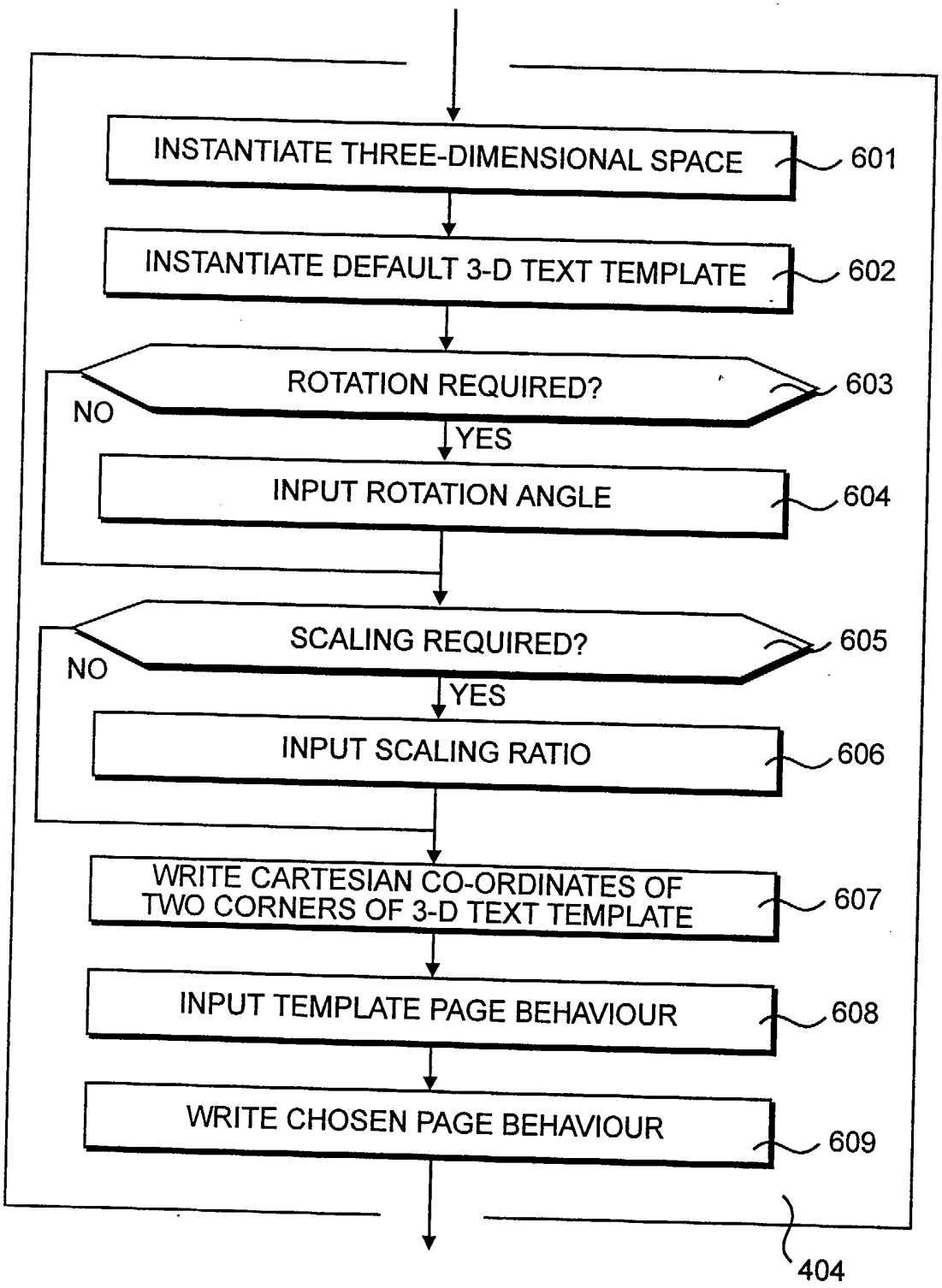
INSTANTIATE THREE-DIMENSIONAL SPACE
601
INSTANTIATE DEFAULT 3-D TEXT TEMPLATE
602
ROTATION REQUIRED?
603
NO
YES
INPUT ROTATION ANGLE
604
SCALING REQUIRED?
605
NO
YES
INPUT SCALING RATIO
606
WRITE CARTESIAN CO-ORDINATES OF TWO CORNERS OF 3-D TEXT TEMPLATE
607
INPUT TEMPLATE PAGE BEHAVIOUR
608
WRITE CHOSEN PAGE BEHAVIOUR
609
404

Figure 6

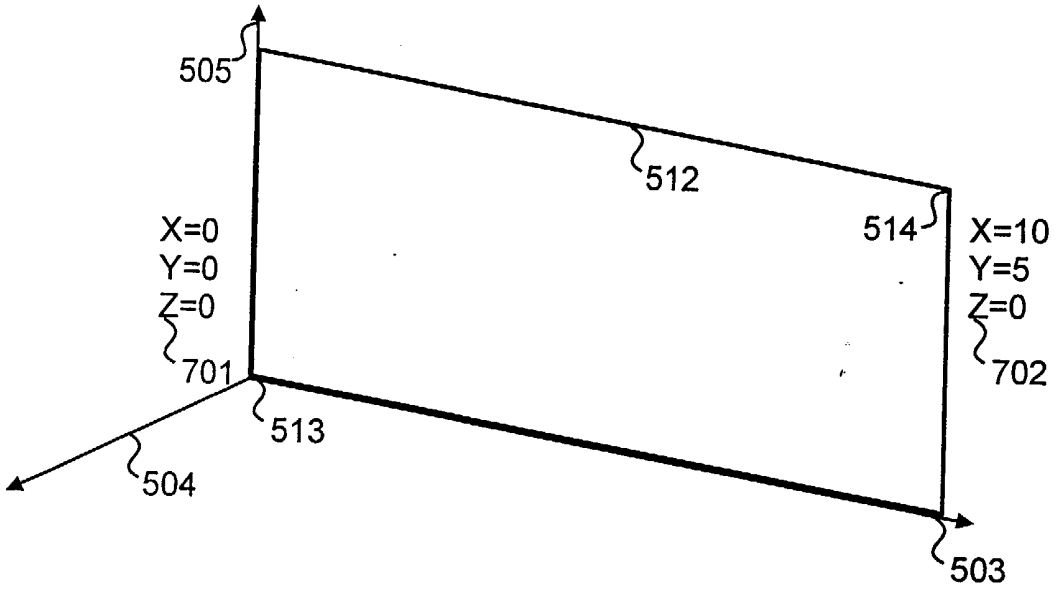

Figure7A

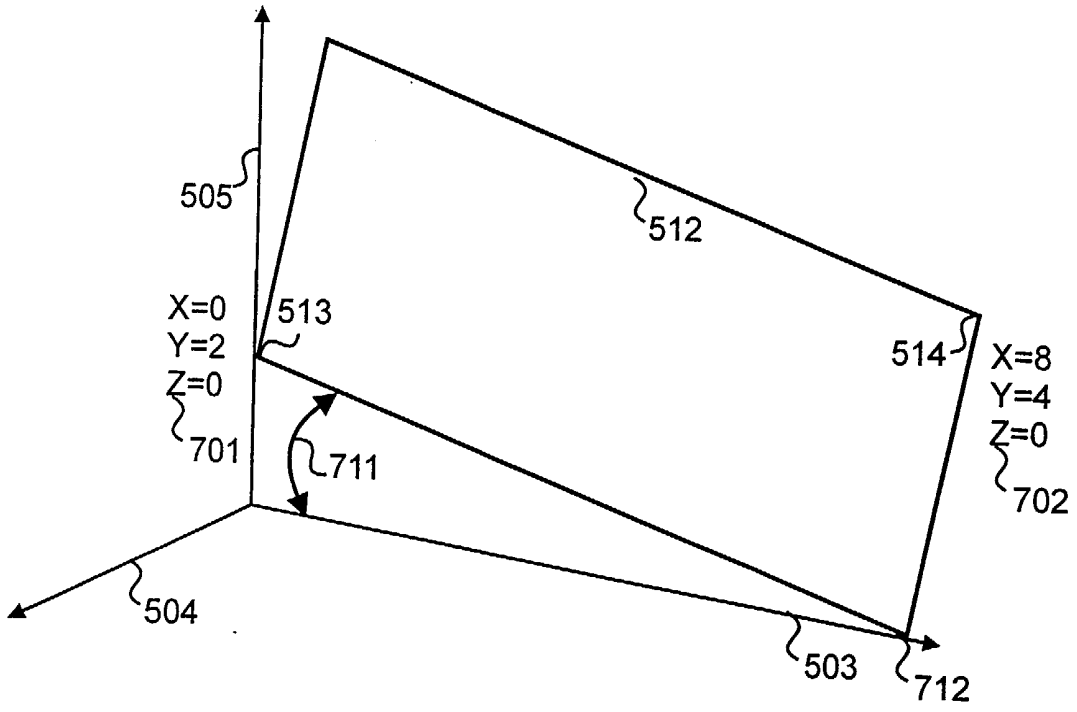

Figure7B

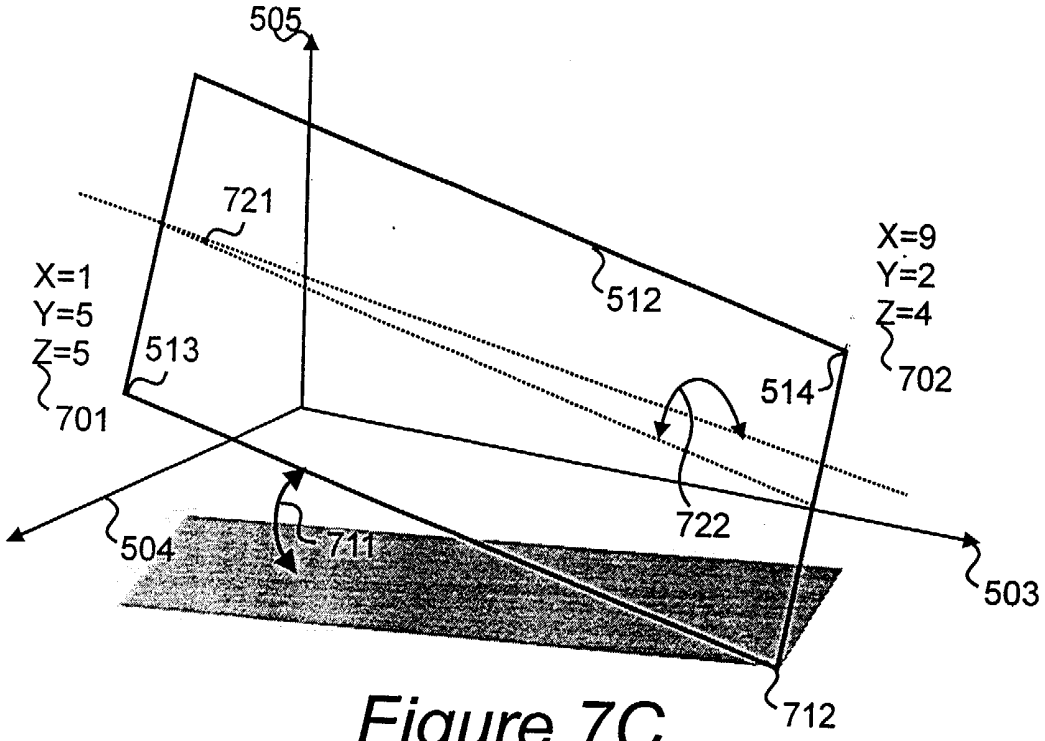

Figure 7C

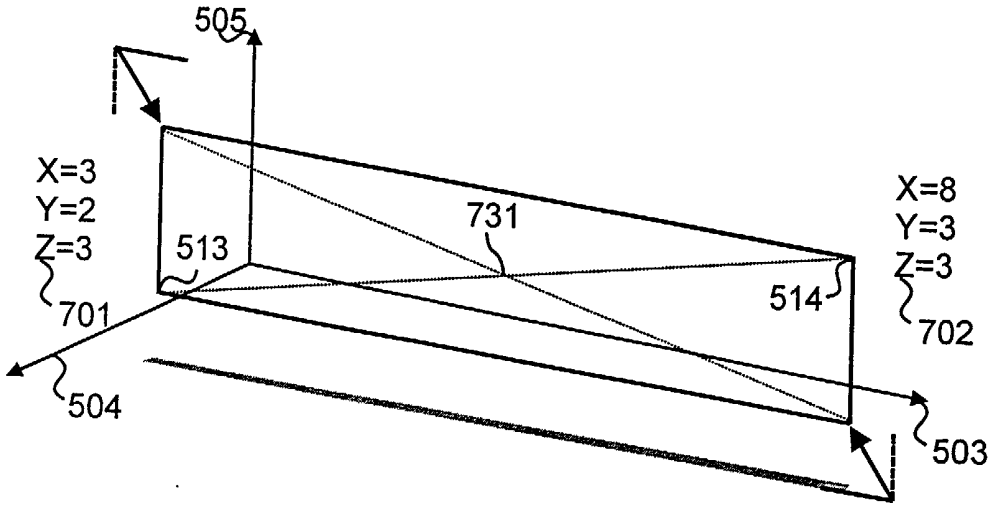

Figure 7D

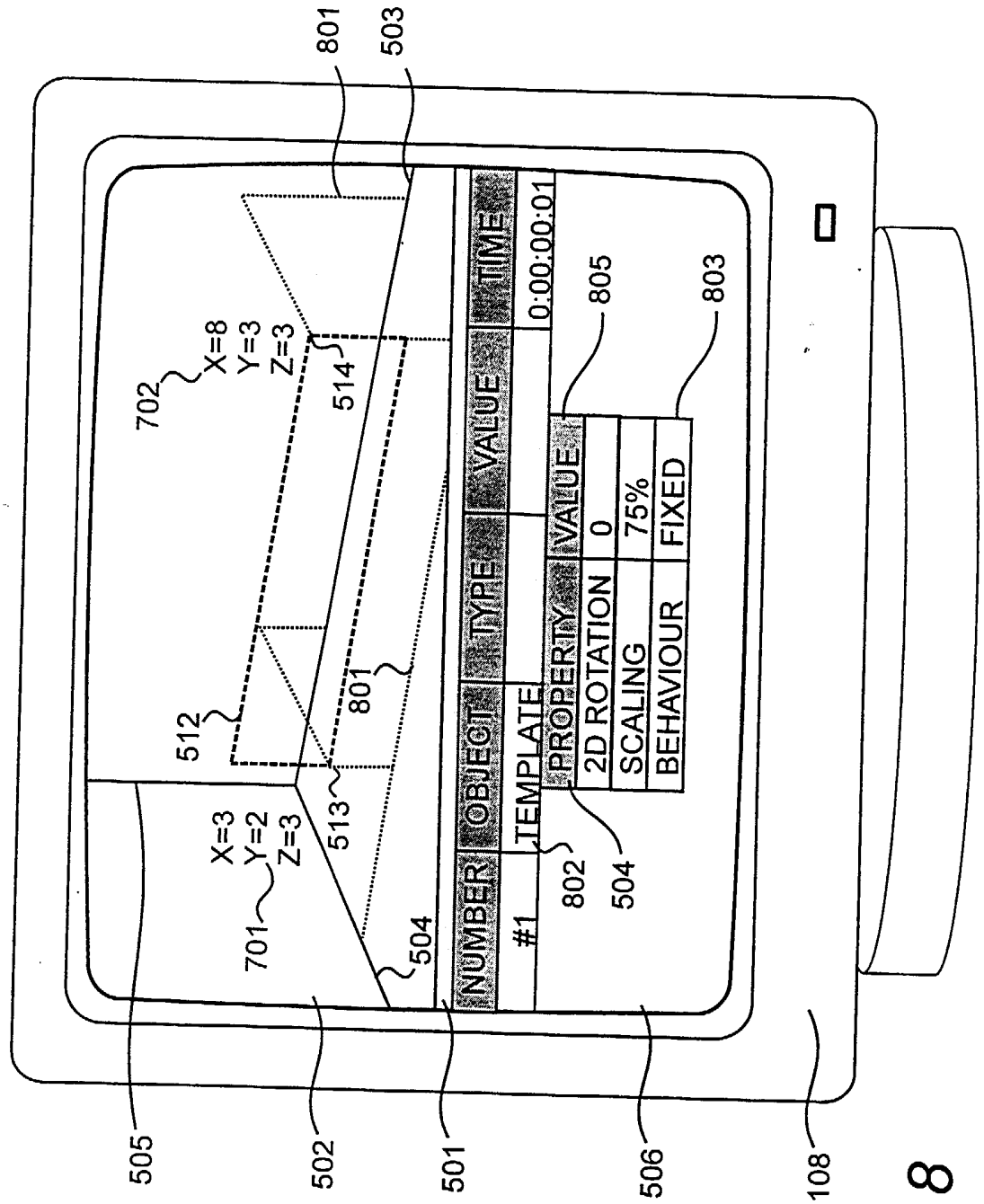
801
503
702
X=8
Y=3
Z=3
514
512
801
513
X=3
Y=2
Z=3
701
504
NUMBER
OBJECT
TYPE
VALUE
TIME
#1
TEMPLATE
PROPERTY
VALUE
0:00:00:01
2D ROTATION
0
SCALING
75%
BEHAVIOUR
FIXED
805
803
802
504
505
502
501
506
108

Figure 8

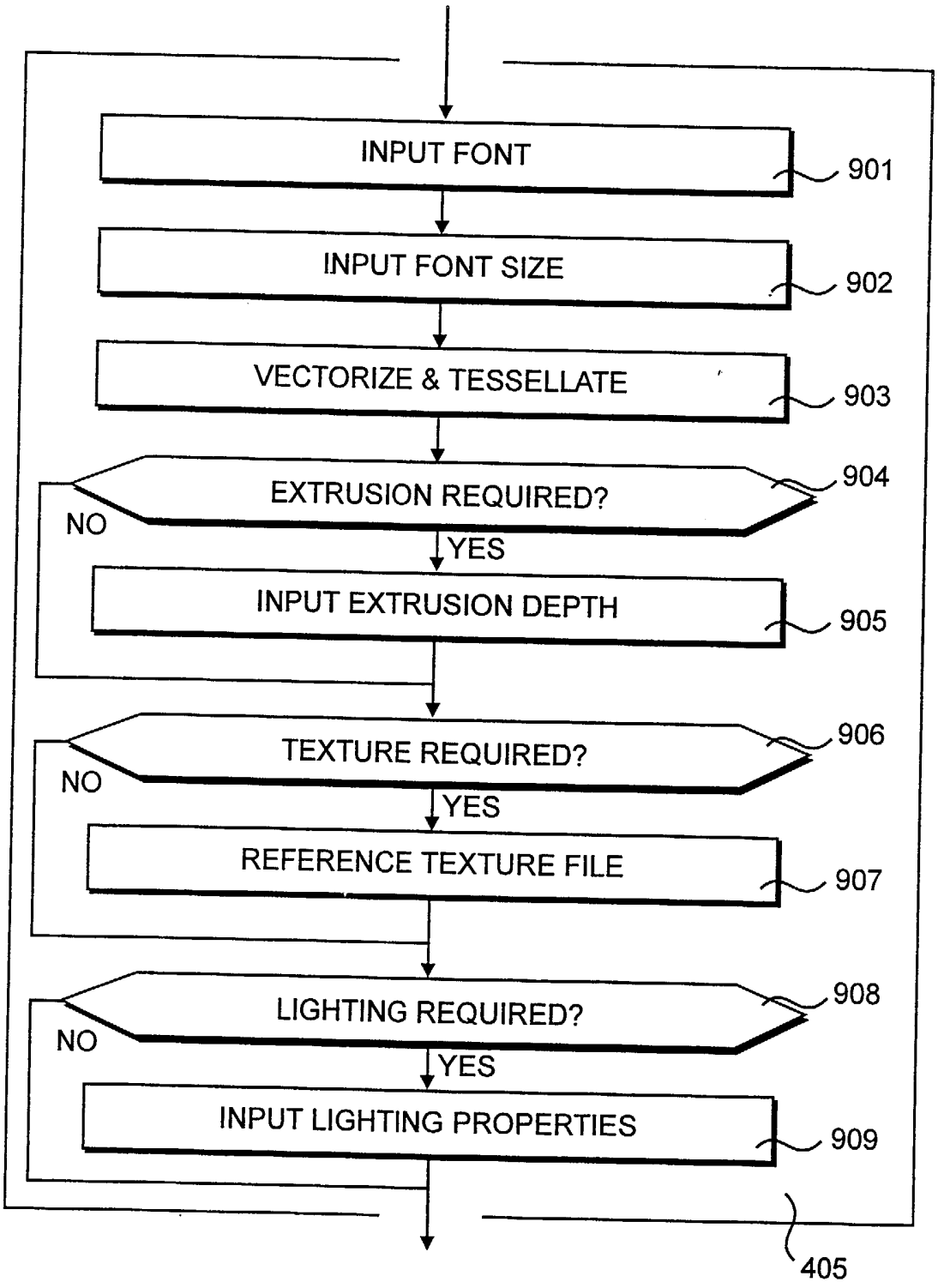
INPUT FONT
901
INPUT FONT SIZE
902
VECTORIZE & TESSELLATE
903
EXTRUSION REQUIRED?
904
NO
YES
INPUT EXTRUSION DEPTH
905
TEXTURE REQUIRED?
906
NO
YES
REFERENCE TEXTURE FILE
907
LIGHTING REQUIRED?
908
NO
YES
INPUT LIGHTING PROPERTIES
909
405

Figure 9

Figure 10A

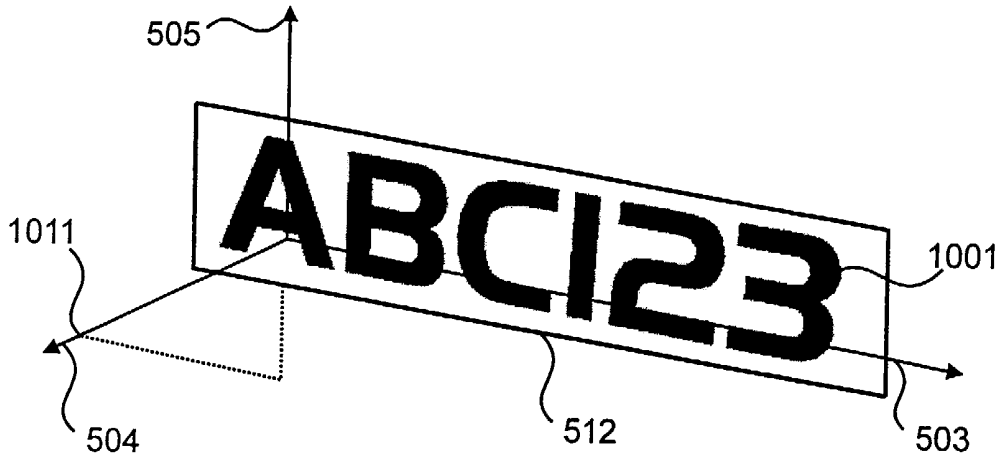

Figure 10B

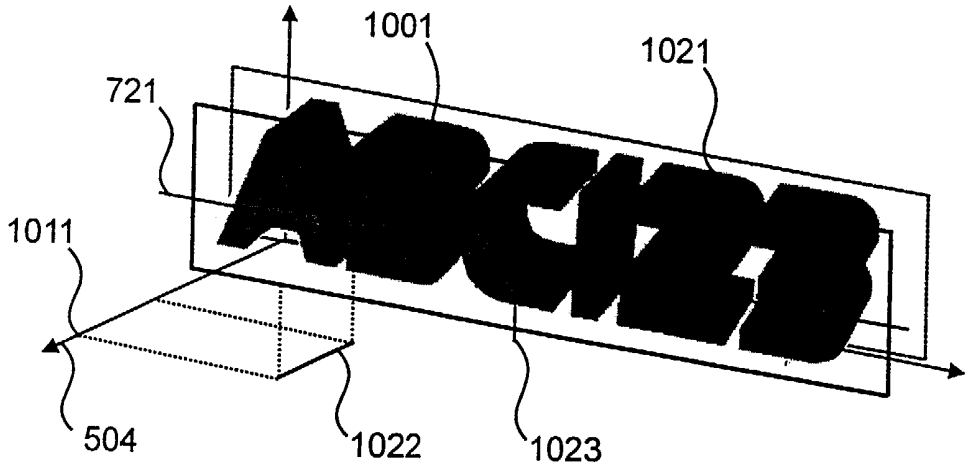

Figure 10C

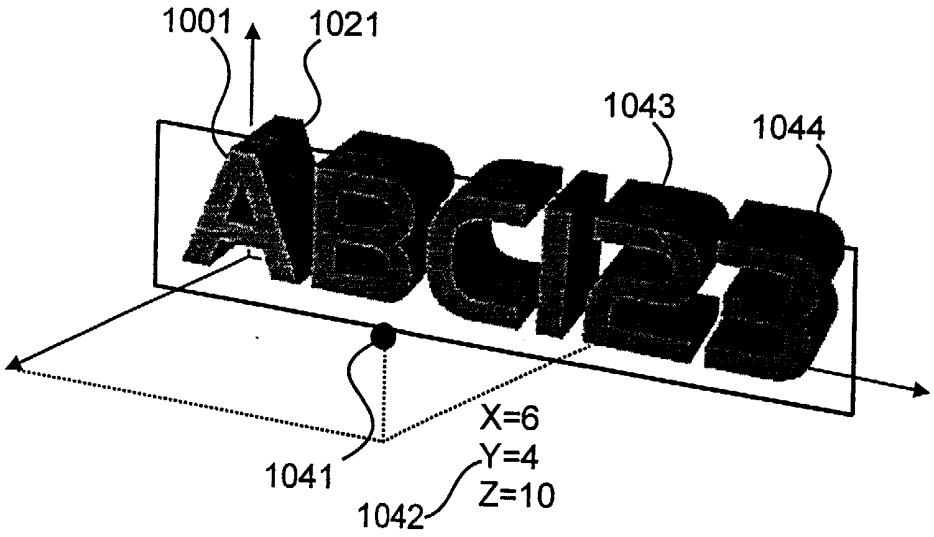

Figure 10D

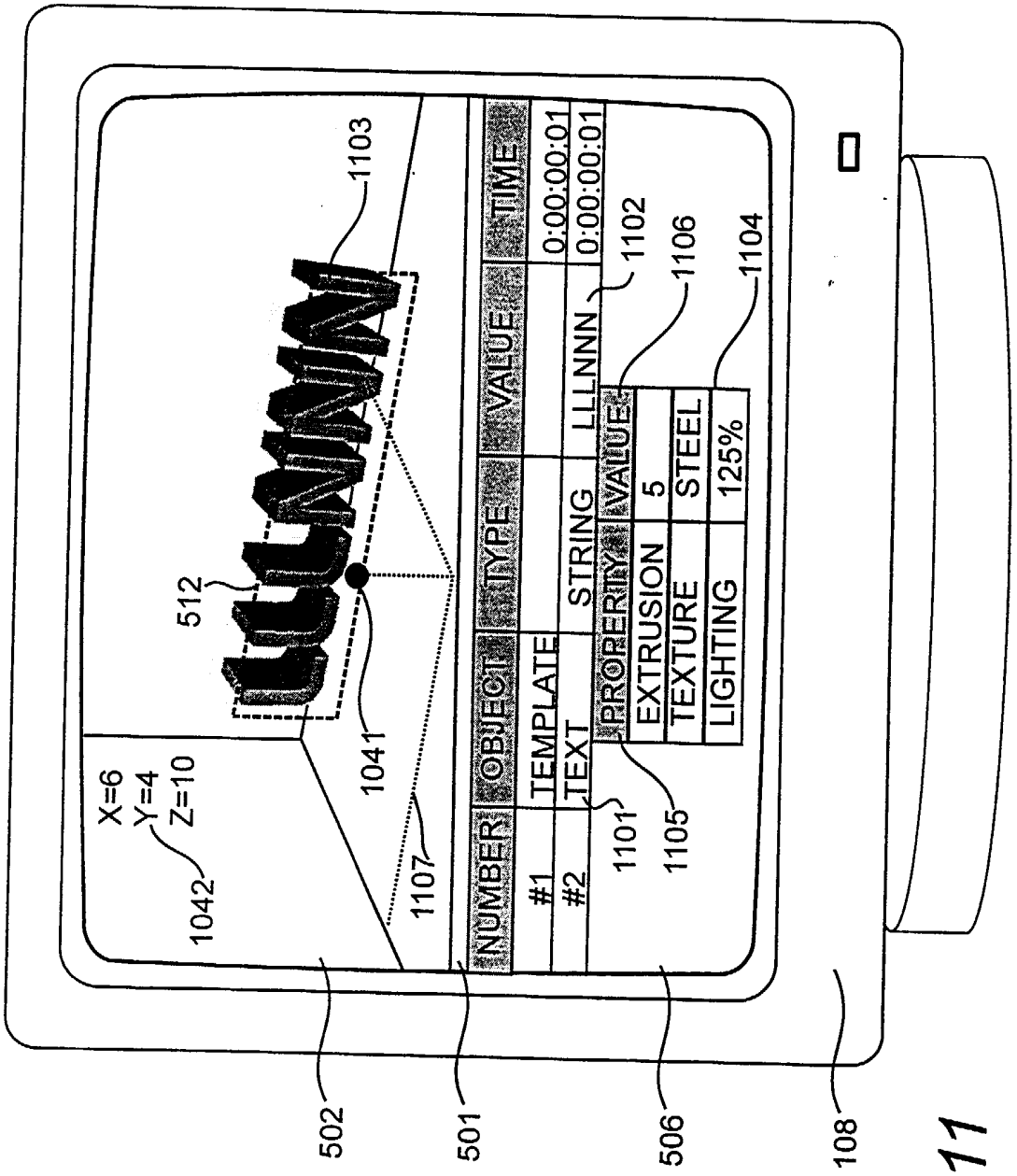
X=6
Y=4
Z=10
1042
512
1041
1103
1107
NUMBER
OBJECT
TYPE
VALUE
TIME
#1
TEMPLATE
STRING
LLLNNN
0:00:00:01
#2
TEXT
STRING
LLLNNN
0:00:00:01
PROPERTY
VALUE
EXTRUSION
5
TEXTURE
STEEL
LIGHTING
125%
1101
1105
1102
1106
1104
502
501
506
108

Figure 11

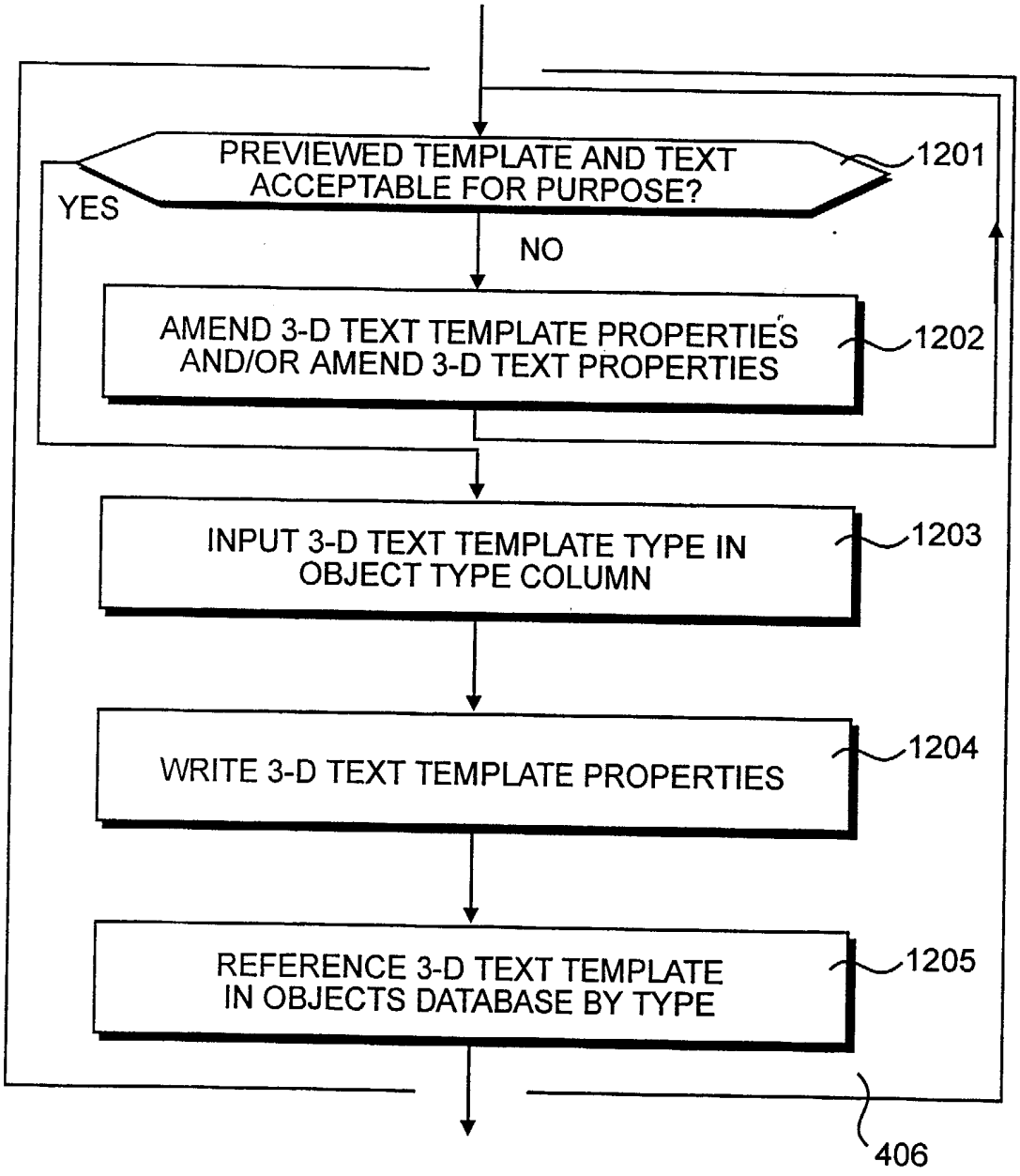
PREVIEWED TEMPLATE AND TEXT ACCEPTABLE FOR PURPOSE?
1201
YES
NO
AMEND 3-D TEXT TEMPLATE PROPERTIES AND/OR AMEND 3-D TEXT PROPERTIES
1202
INPUT 3-D TEXT TEMPLATE TYPE IN OBJECT TYPE COLUMN
1203
WRITE 3-D TEXT TEMPLATE PROPERTIES
1204
REFERENCE 3-D TEXT TEMPLATE IN OBJECTS DATABASE BY TYPE
1205
406

Figure 12

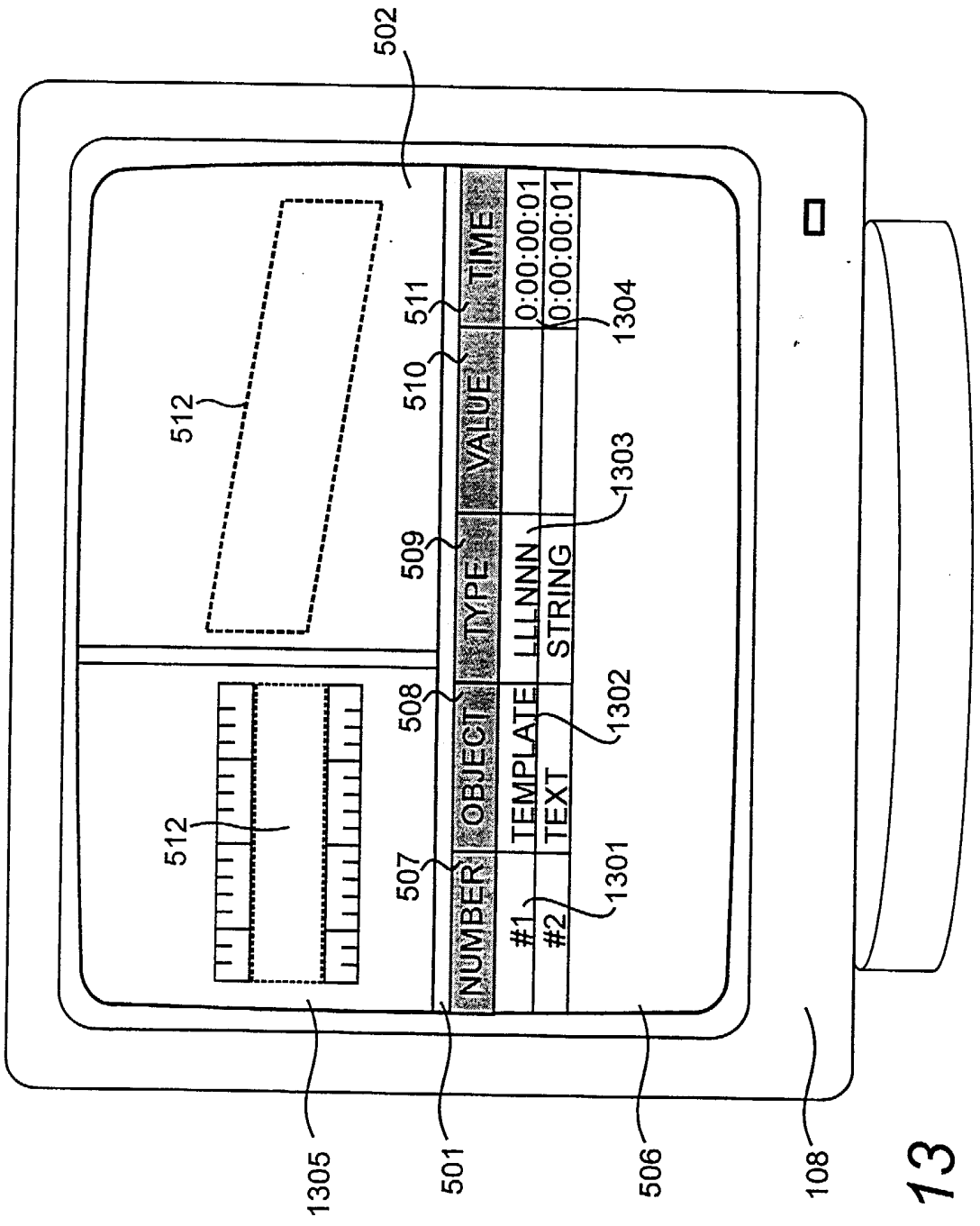
502
512
512
512
511
510
509
508
507
TIME
VALUE
TYPE
OBJECT
NUMBER
0:00:00:01
0:00:00:01
LLLNNN
STRING
TEMPLATE
TEXT
#1
#2
1304
1303
1302
1301
1305
501
506
108

Figure 13

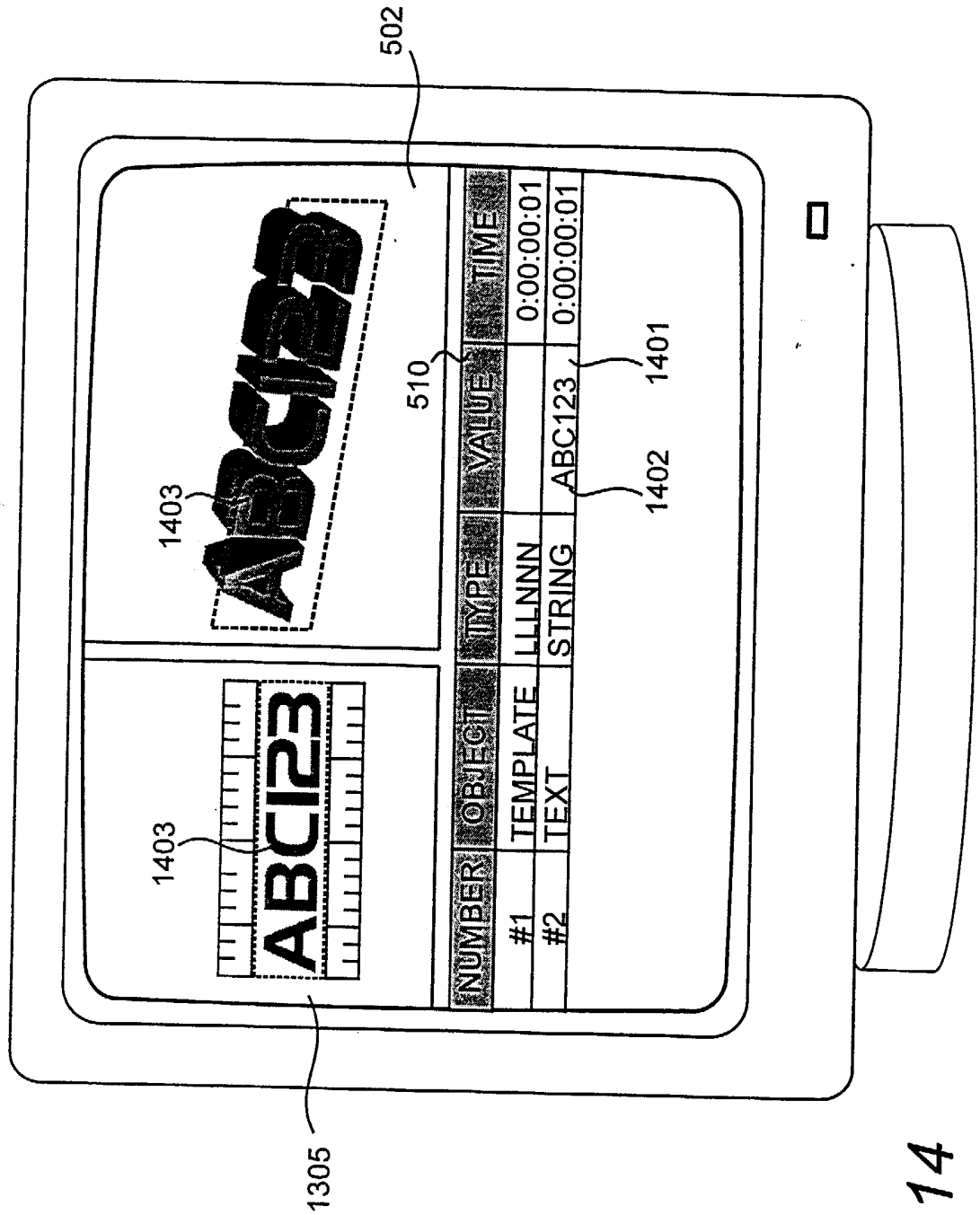
502
1403
ABC123
510
1403
ABC123
NUMBER
OBJECT
TYPE
VALUE
TIME
#1
TEMPLATE
LLLNNN
0:00:00:01
#2
TEXT
STRING
ABC123
0:00:00:01
1401
1402
1305

Figure 14

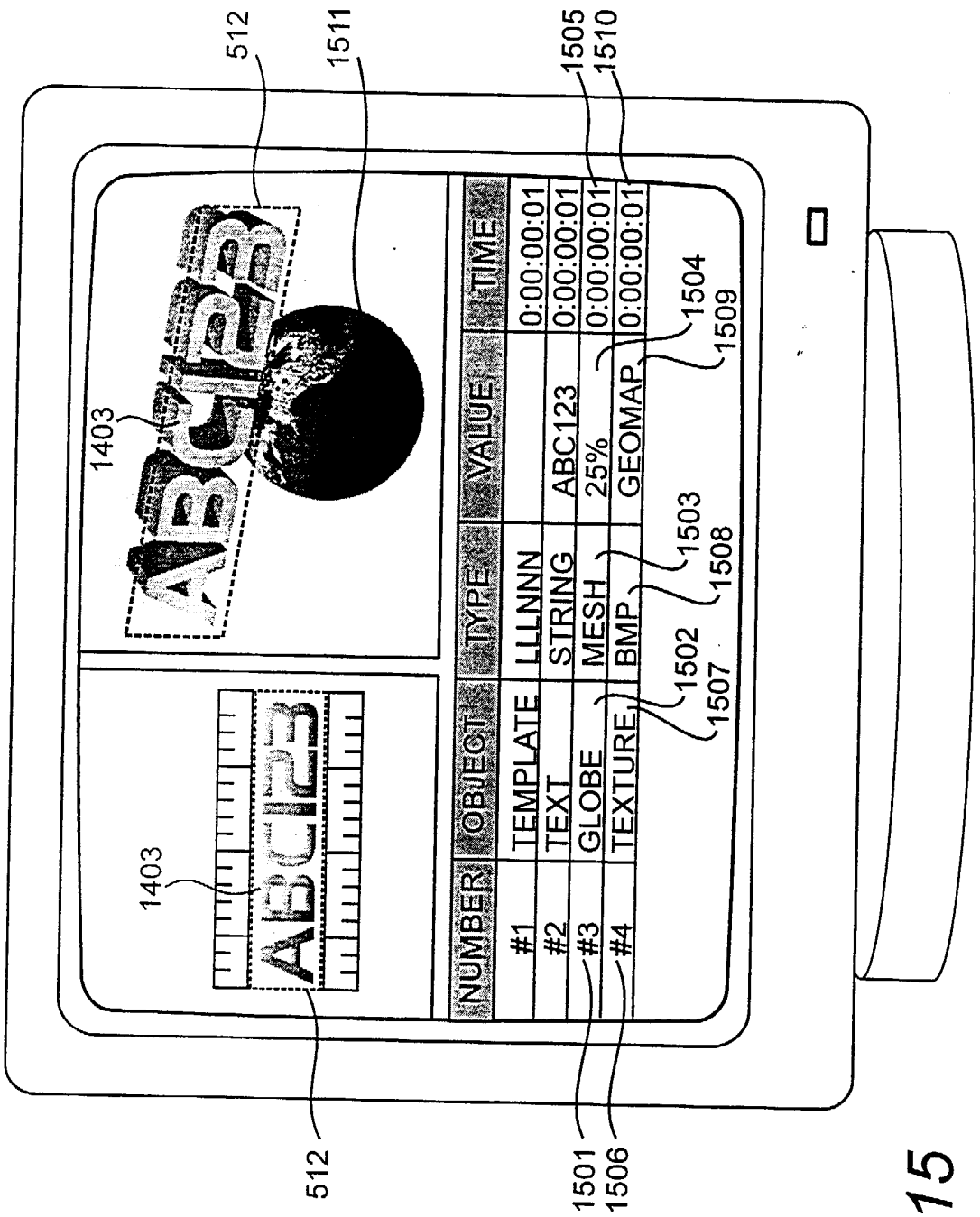
512
1511
1505
1510
1403
1403
512
1501
1506
NUMBER
OBJECT
TYPE
VALUE
TIME
#1
TEMPLATE
LLLNNN
0:00:00:01
#2
TEXT
STRING
ABC123
0:00:00:01
#3
GLOBE
MESH
25%
0:00:00:01
#4
TEXTURE
BMP
GEOMAP
0:00:00:01
1502
1507
1503
1508
1504
1509

Figure 15

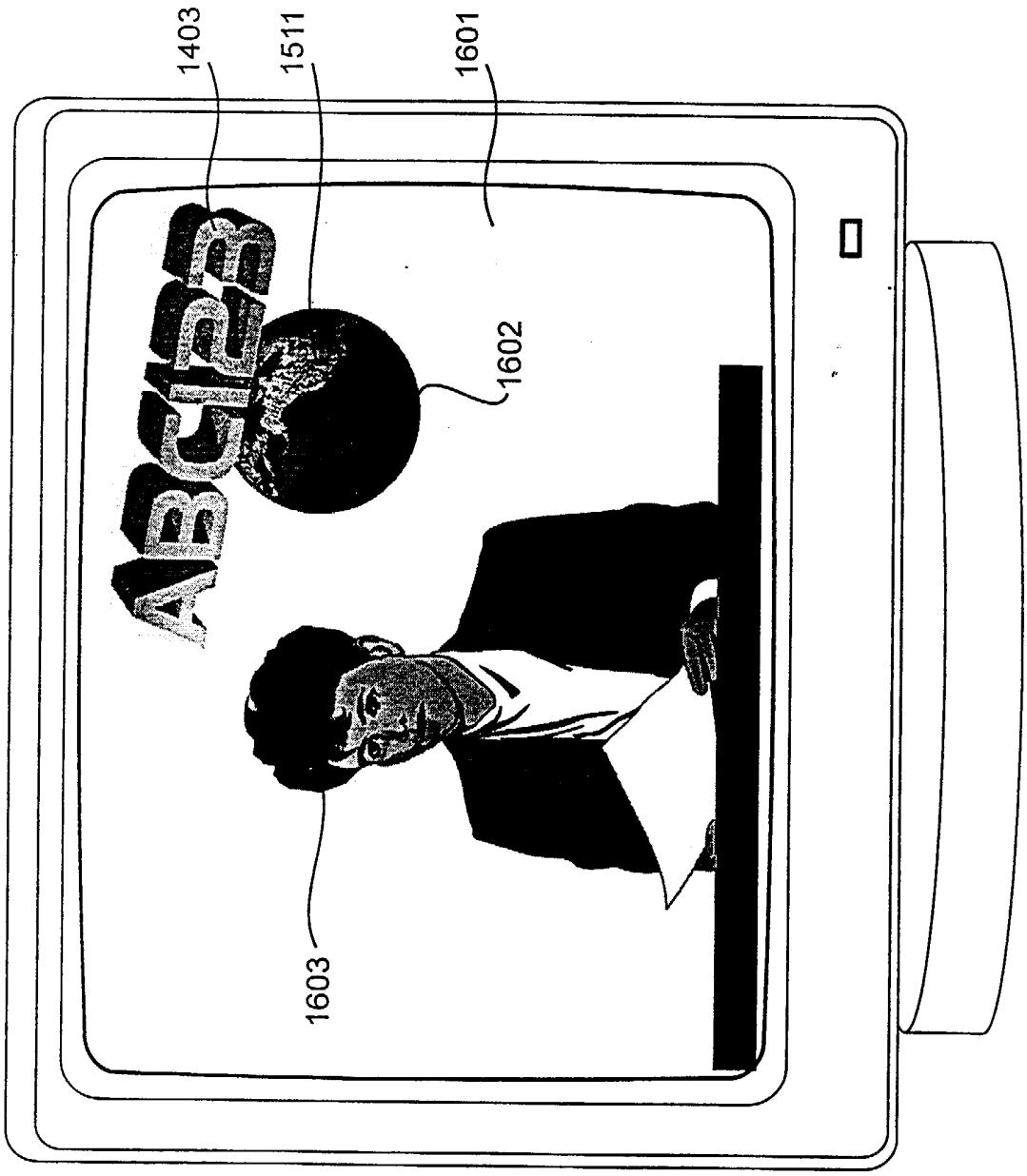

Figure 16

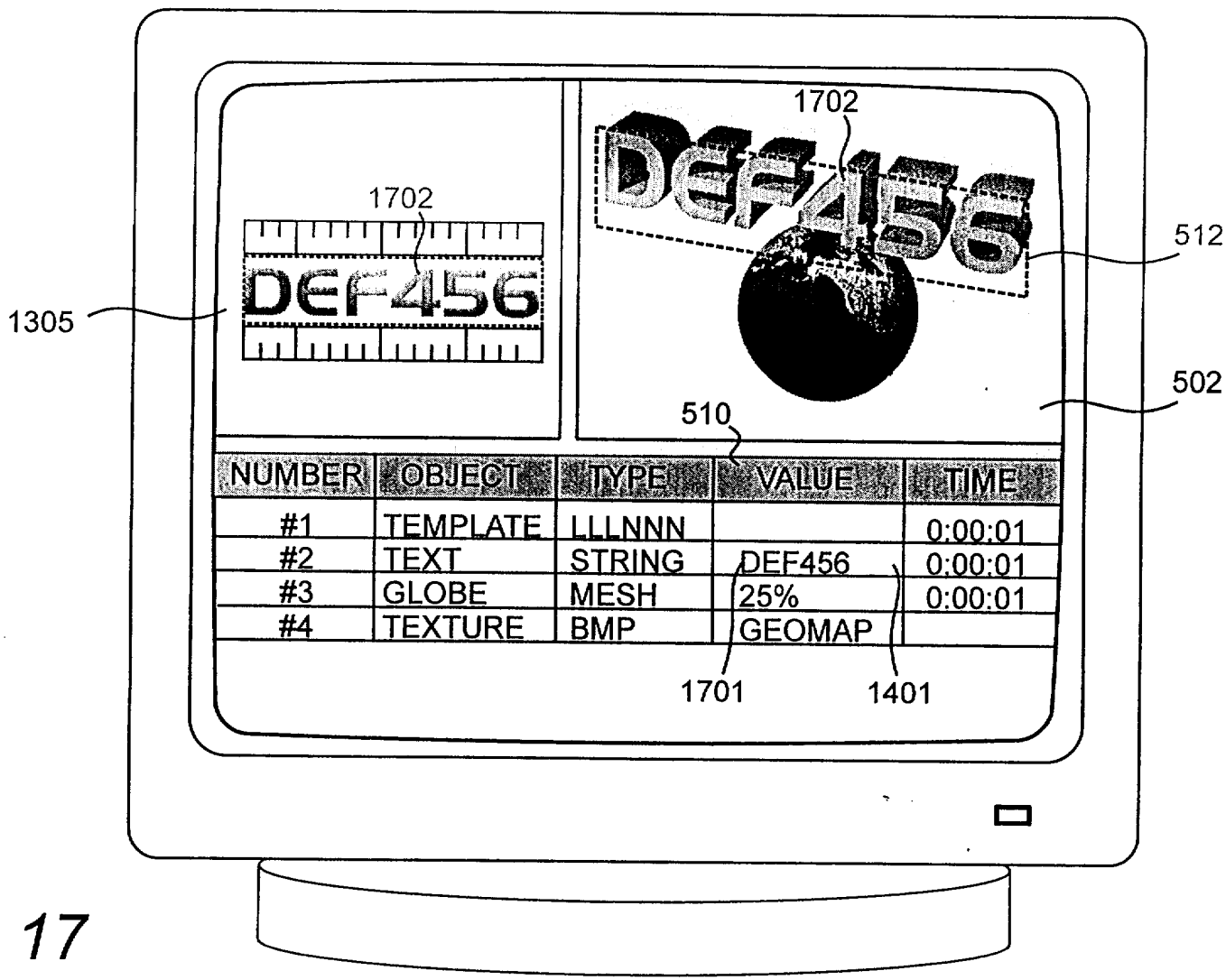
1702
DEF456
1305
1702
DEF456
512
502
510
NUMBER
OBJECT
TYPE
VALUE
TIME
#1
TEMPLATE
LLLNNN
0:00:01
#2
TEXT
STRING
DEF456
0:00:01
#3
GLOBE
MESH
25%
0:00:01
#4
TEXTURE
BMP
GEOMAP
1701
1401

Figure 17

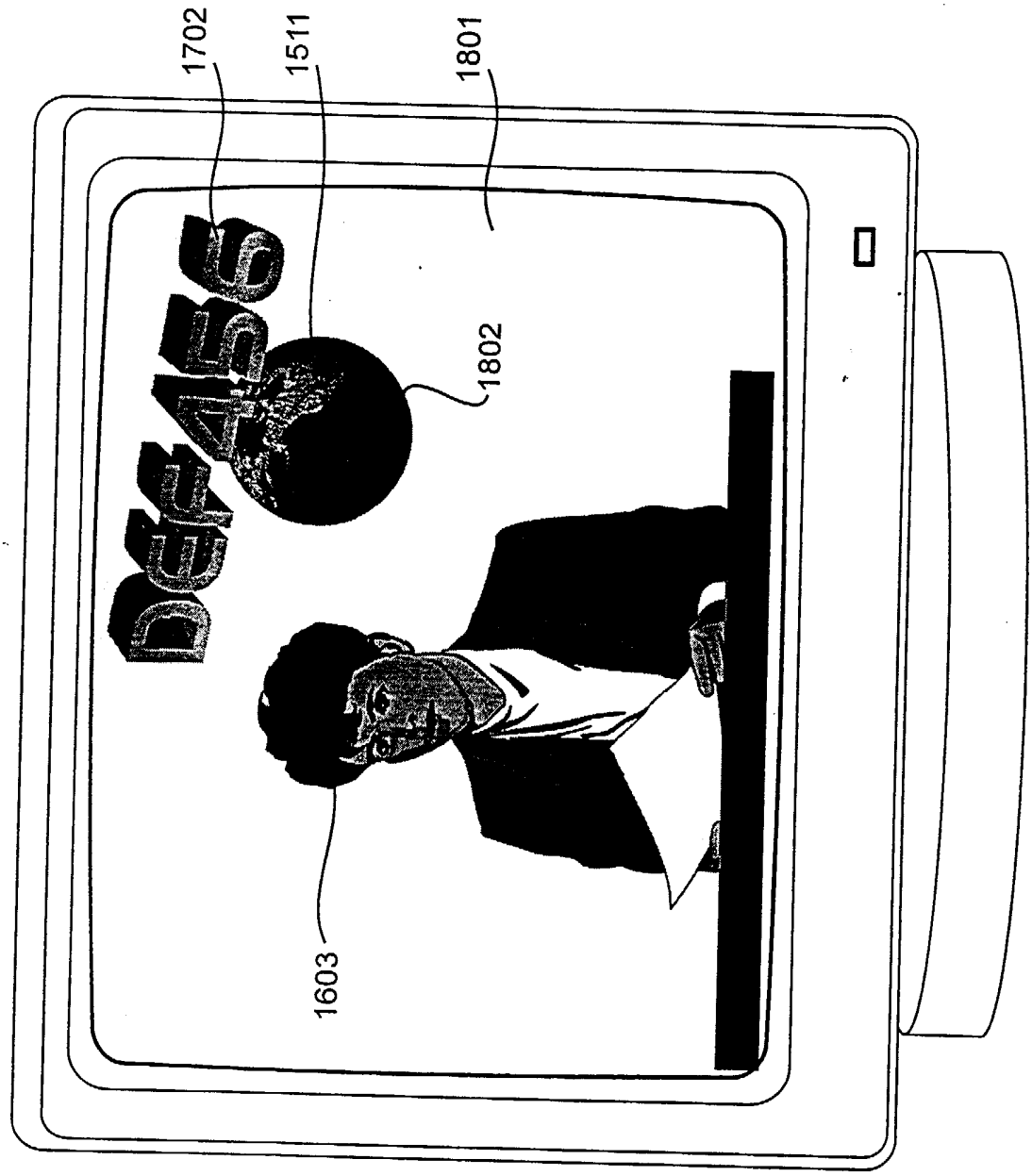

Figure 18

Generating Three Dimensional Text

Background of the Invention

1. Field of the Invention

The present invention relates to generating three-dimensional text within images composited in real time.

2. Description of the Related Art

Systems are known with which to generate three-dimensional text characters. According to the prior art, said text characters can be represented as a three-dimensional geometric model including polygons constructed from vertices defined by three-dimensional co-ordinates. Alternatively, any of said text character may be used to derive a set of curves defining the outline of said character. This set of curves is transformed into a set of polygons and said set of polygons may be created by converting said curves into sets of connected line segments and then tessellating the polygon defined by said line segments.

Regardless of the method employed to confer image depth to said text characters, as well as of the various three-dimensional spatial transformations, lighting effects and other colourisations which are also well known to those skilled in the art, these text character graphic objects are traditionally transferred to a graphics processor to be manipulated by an animator or editor in order to produce an image that can be further processed, ie integrated into a film or video broadcast.

Therefore, it can be said that three-dimensional characters generated according to the prior art require an editor to be aware of the contents of the image and/or broadcasts within which said three-dimensional text will be implemented, in order to accurately define, transform and render said three-dimensional text. According to said prior art, the contents of said graphical titles always have to be known in advance of the filming of the video sequence, as every successive instantiation of said titles, corresponding to successively changing text contents, has to be designed and rendered in order to ensure that it conforms to position and size imperatives when overlayed onto each frame of the broadcast, thereby precluding live broadcast from benefiting from said three-dimensional text titling effects.

The present invention overcomes this problem by providing a two-dimensional template defined within a three-dimensional space which formats text according to three-dimensional properties such that said text can be rendered as three-dimensional text in real-time.

Brief Summary of the Invention

According to a first aspect of the present invention, there is provided an apparatus for generating three-dimensional text within images composited in real time, comprising means for generating said three-dimensional text from one or a plurality of text formatting templates, including processing means and storage means. Said storage means stores said text formatting templates and instructions for said processing means. Said instructions configure said processing means to perform the steps of defining one of said text formatting templates as a two-dimensional template equipped with cartesian co-ordinates within a three-dimensional

space; equipping said defined text formatting template with three-dimensional preferences with which to format text to be included in said template; equipping said defined text formatting template with said text and rendering said two-dimensional template including said text formatted according to said three-dimensional preferences within said three-dimensional space.

According to a second aspect of the present invention, there is provided a method for generating three-dimensional text within images composited in real time, by means of generating said three-dimensional text from one or a plurality of text formatting templates. Storage means stores said text formatting templates and instructions for processing means. Said instructions configures said processing means to perform the steps of defining one of said text formatting templates as a two-dimensional template equipped with cartesian co-ordinates within a three-dimensional space; equipping said defined text formatting template with three-dimensional preferences with which to format text to be included in said template; equipping said defined text formatting template with said text and rendering said two-dimensional template including said text formatted according to said three-dimensional preferences within said three-dimensional space.

Brief Description of the Several Views of the Drawings

Figure 1 shows a computer editing system, including a computer system video display unit and a broadcast-quality monitor;

Figure 2 details the typical hardware components of the computer editing system shown in *Figure 1*;

Figure 3 illustrates the contents of the main memory shown in *Figure 2*;

Figure 4 details the actions performed at the computer editing system by the 3-D text application shown in *Figure 3*, according to the invention;

Figure 5 shows the graphical user interface of the 3-D text application shown in *Figures 3* and *4*, including a visualisation window;

Figure 6 details the actions performed at the computer editing system shown in *Figure 1* in order to define the 3-D template properties shown in *Figure 4*;

Figure 7A shows a two-dimensional 3-D text template instantiated within a 3-D space within a visualisation window shown in *Figure 5*;

Figure 7B shows the two-dimensional 3-D text template shown in *Figure 7A* rotated in two dimensions within said 3-D space;

Figure 7C shows the two-dimensional 3-D text template shown in *Figure 7A* rotated in three dimensions within said 3-D space;

Figure 7D shows the two-dimensional 3-D text template shown in *Figure 7B* scaled within said 3-D space;

Figure 8 shows the graphical user interface of *Figure 5* including a two-dimensional 3-D text template as detailed in *Figures 7A* to *7D*;

Figure 9 details the actions performed by the 3-D text applications shown in *Figures 3* and *4* in order to define the 3-D text properties in the 3-D text template;

Figure 10A shows a string of text characters equipped with a font and a font size;

Figure 10B shows the string of text characters shown in *Figure 10A* equipping the two-dimensional 3-D text template as shown in *Figure 8*;

Figure 10C shows the string of text characters shown in *Figure 10B* equipped with extrusion parameters and a texture;

Figure 10D illustrates the string of text characters as shown in *Figure 10C* equipped with lighting properties;

Figure 11 shows the graphical user interface of *Figure 8* including a two-dimensional 3-D text template and 3-D text as detailed in *Figures 10A* to *10D*;

Figure 12 details the actions performed by the 3-D text application shown in *Figures 3* and *4* in order to write the properties of the 3-D text template shown in *Figure 11*;

Figure 13 shows the GUI of the 3-D text application shown in *Figure 3* when the 3-D text template properties and the 3-D text properties within said template are retrieved according to the invention;

Figure 14 shows the 3-D text rendered within the application GUI shown in *Figure 13* according to the invention;

Figure 15 shows the 3-D text shown in *Figure 14* rendered with other three-dimensional objects according to the invention;

Figure 16 shows a frame of the live broadcast shown in *Figure 1* composited with 3-D text according to the invention.

Figure 17 shows the GUI as shown *Figure 15* when the string of text characters is changed;

Figure 18 shows the frame as shown in *Figure 16* when the string of text characters changed in *Figure 17* is rendered.

Best Mode for Carrying Out the Invention

A computer editing system, including a computer system video display unit and a broadcast-quality monitor, is shown in *Figure 1*.

Figure 1

In the system shown in *Figure 1*, instructions are executed upon an IBM Compatible Personal Computer or an Apple Macintosh. However, depending upon the level of processing required and the size of images being considered, large graphics-based processing system may be used, such as an ONYX II manufactured by Silicon Graphics Inc.

The processing system **101** receives instructions from an operator by means of a stylus **102** supplied to a touch tablet **103**, in response to visual information received by means of a visual display unit **104**. In addition, data may be supplied by the operator via a keyboard **105** or a mouse **106**, with input source material being received via a real-time digital video recorder or similar equipment configured to supply high bandwidth frame data.

The processing system **101** includes internal volatile memory in addition to bulk randomly accessible storage, which is provided by means of a RAID disk array **107**. Output material may also be viewed by means of a high quality broadcast monitor **108**. System **101** includes a CD ROM reader **109** to allow executable instructions to be read from an instruction carrying medium in the form of a CD ROM **110**. In this way, executable instructions are installed on the computer system for subsequent execution by the system. System **101** also includes an external medium reader **111** to allow object properties and data to be written to an instruction or data carrying medium in the form of a floppy disk **112**.

The internal architecture for the processing system **101** is shown in *Figure 2*.

Figure 2

The system includes a central processing unit **201** which fetches and executes instructions and manipulates data. Frequently accessed instructions and data are stored in a high-speed cache memory **202**. Said central processing unit **201** is connected to a system bus **203**. System bus **203** provides connectivity with a larger main memory **204**, which requires significantly more time for the CPU to access than the cache **202**. The main memory **204** contains between one hundred and twenty-eight and two hundred and fifty-six megabytes of dynamic random access memory. A hard disk drive (HDD) **205** provides non-volatile bulk storage of instructions and data. A graphics card **206** receives graphics data from the CPU **201**, along with graphics instructions and supplies graphical data to visual display unit **104** and broadcast-quality monitor **108**. The I/O device **207** or universal serial bus **208** receive input commands from stylus **102** and tablet **103**, keyboard **105** and mouse **106**. The external medium drive **111** is primarily provided for the writing of data, such as sets of ASCII characters corresponding to data generated by means of stylus **102**, tablet **103**, keyboard **105** and mouse **106** to floppy **112**, and CD-ROM drive **109** is provided for the loading of executable instructions stored on CD-ROM **110** to the hard disk drive **205**. A network card **209** provides connectivity to the RAID array **107**.

A summary of the contents of the main memory **204** of the system **101** is shown in *Figure 3*, as subsequently to the loading of instructions according to the present invention.

Figure 3

Main memory **204** includes primarily an operating system **301**, which is preferably Microsoft Windows 2000 or LINUX as said operating systems are considered by as those skilled in the art to be particularly stable when using computationally intensive applications. Main memory **204** also includes a 3-D text application **302**, which provides the operator of system **101** with means with which to visualise ASCII characters inputted by means of keyboard **105** and display said ASCII input onto visual display unit **104**.

Main memory **204** includes one or a plurality of 3-D text templates **303** according to the invention, an object database **304**, object meshes **305** and object textures **306**. Main memory **204** finally includes user data **307**.

The successive operations required to generate three-dimensional text according to the invention are detailed in *Figure 4*.

Figure 4

At step **402**, the system **101** is switched on. The instructions corresponding to the 3-D text application **302** are subsequently loaded at step **402** from CD ROM **110**.

At step **403**, a question is asked as to whether an existing 3-D template should be retrieved for compositing purposes. If the question of step **403** is answered positively, the 3-D text application **302** loads the 3-D text template **303** from the hard disk drive **205** or the floppy disk **112** in conjunction with objects database **304**, wherein said template **303** is referenced, and control is directed to step **407**. Alternatively, if the question of step **403** is answered negatively, then at step **404** a default 3-D text template **303** is defined and equipped with properties within a three-dimensional

space. At step **405**, the text which will be equipping said 3-D text template **303** is defined and equipped with properties within said template. Upon completing the successive defining operations at step **404** and **405**, the resulting final properties are eventually written as a 3-D text template **303** referenced within objects database **304** and likely to be retrieved according to step **403** at a later session of application **302**.

At step **407**, a string of characters is inputted by means of keyboard **105** into the objects database **304** and is subsequently rendered at step **408** according to the definitions and properties of steps **404** to **406**.

A question is asked at step **409** as to whether the string of character inputted at step **407** requires amending, for instance if the broadcast requires multiple titles rendered identically or, if the string of characters inputted at step **407** contained a spelling or grammatical error. If the question of step **409** is answered positively, then control is returned to step **407**, wherein a new string of characters can be inputted or the existing character string can be edited. Alternatively, if the question asked at step **409** is answered in the negative, the system **101** is eventually switched off at step **410**.

An example of the graphical user interface (GUI) of the 3-D text application **302** displayed on the output monitor **104** is shown in *Figure 5*.

Figure 5

The GUI **501** divides the display area of output monitor **104** into multiple windows. A first of said windows is a visualisation window **502**, within which the respective results of operations performed according to steps **403** to **408** are previewed at various levels of rendering quality. Said various levels range from wireframe quality, i.e. vectored lines, to fully-rendered

quality, i.e. said vectored lines onto which textures, lighting and a plurality of visual editing effects which will be further detailed in the present embodiment are implemented. In the example, a three-dimensional space is visualised with reference to a width abscissa **503**, a depth abscissa **504** and a height ordinate **505**.

A second window **506** displays the contents of the page of the objects database **304** relating to the specific template **303** being edited. Said page includes an object number referencing column **507**, an object referencing column **508**, an object type column **509**, an object value column **510** and a timecode display column **511**. Depending upon the object selected, not every object requires a type and/or value.

According to the invention, each entry in each of said columns may be selected for editing by means of stylus **102** and tablet **103**, keyboard **105**, or mouse **106** or a combination thereof, and new windows may be generated for said editing purpose within the GUI **501** depending upon the type of object selected, as will be detailed and shown further in the present embodiment.

In the example, a new 3-D text template requires creating and 3-D text application **302** thus generates a new page in the object database **304** with a default 3-D text template **303**. Said default template is rendered within window **502** as a two-dimensional template object **512**, the cartesian co-ordinates of two opposite corners **513** and **514** of which are overlayed in said window **502**. Corner **513** is located at the origin of the three-dimensional space and thus its cartesian co-ordinates are (0, 0, 0). Conversely, corner **514** is diagonally opposite to corner **513** and is thus equipped with width and height co-ordinates and, in the example, said cartesian co-ordinates are (10, 5, 0).

The various steps required in order to define a two-dimensional template and equip said template with properties within the three-dimensional space shown in window **502** at step **403** are further detailed in *Figure 6*.

Figure 6

At step **601**, the 3-D text application **302** instantiates a three-dimensional space equipped with an origin, a width **503**, a height **505** and a depth **505**, such that any object placed within said three-dimensional space can be accurately located by means of (x, y, z) cartesian co-ordinates.

At step **602**, 3-D text template **303** is instantiated as a two-dimensional template object **512** within said three-dimensional space. That is, said template is a surface delimited by a width and a length but it is not equipped with any depth yet. At step **603**, a question is asked as to whether the template instantiated at step **602** must be rotated in order to be satisfactorily positioned within the three-dimensional space. If the question asked at step **603** is answered negatively, control is directed to step **605**. Alternatively, if the question asked at step **603** is answered positively, then at step **604** a rotation angle is inputted as an angular value or the template object **512** itself is rotated within the three-dimensional space by means of mouse **106** or a combination of stylus **102** and table **103**. The rotating operation carried out at step **604** can be carried out within a two-dimensional plane and thus the template rotates within the same plane as is defined by its surface, or said rotation may be free-form within the three-dimensional space and, at this stage, confers a depth property to the template.

At step **605** a question is asked as to whether the template object requires scaling, i.e. the standard surface of said template object **512** when it

is instantiated at step **602** must be increased or decreased. If the question asked at step **605** is answered negatively, control is directed to step **607**. Alternatively, if the question asked at step **605** is answered positively, at step **606** a scaling percentage is input by means of keyboard **105**, or the template object **512** is scaled by means of mouse **106** or a combination of stylus **102** and tablet **103**.

At step **607**, the final (x, y, z) cartesian co-ordinates of two opposite corners **513**, **514** of the template object **512** are written in the 3-D text template **303** properties. At step **608**, the template behaviour pattern is chosen amongst three specific modes.

The fixed mode locks the cartesian values written at step **607** and, upon equipping the 3-D text template with text, said fixed mode also locks all attributes of said text such that it places a limit on the length of the character string displayable by said template.

Alternatively, the wrap mode only locks the width of the template as the only constraint, such that a string of characters inputted in said template beyond the total width of said template will be rendered on a new lower line below the first line of said character string, akin to a carriage return taking place.

Finally, the stretch mode selectable at step **608** confers dynamism to the 3-D text template, characterised in that the surface of said 3-D text template increases in direct proportion to the content, i.e. the length, of the string of characters. The cartesian values written at step **607** are uniformly increased such that corners **513**, **514** extend away from one another and thus increase the surface they define.

Upon inputting the template behaviour at step **608**, the chosen page mode is written in the 3-D text template properties at step **609**. The template object **512** instantiated at step **602** within a three-dimensional space instantiated at step **601** in the visualisation window **502** is shown in greater detail in *Figure 7A*.

Figure 7A

In order to accurately locate and position the template object **512** within the three-dimensional space, the 3-D text application **302** references two opposite corners **513** and **514** of the surface delimited by template. As it is known that corners **513** and **514** each represent the intersection at a right angle of two strictly perpendicular lines and that at least one line of one of said sets is known to be strictly parallel to another line in the opposite set, the 3-D text application **302** automatically computes the remaining two corners of template object **512**. The benefit of referencing template object **512** by means of two corners as opposed to four is to minimise the amount of data required in order to define template object **512** within the 3-D space.

As the volume instantiated at step **601** is three-dimensional, the two corners **513**, **514** of template object **512** are thus equipped with respective cartesian co-ordinates **701**, **702** that allows the 3-D text application **302** to accurately position said points in relation to the width **503**, depth **504** and height **505** of said three-dimensional space. As the template object **512** is initially instantiated as a two-dimensional object, said points **513** and **514** are only equipped with length and height co-ordinates and their respective depth co-ordinate is null. In the example, as it was previously explained, the cartesian co-ordinates **701** of corner **513** are (0,0,0) and the cartesian co-

ordinates **702** of corner **513** are (10,5,0), with said co-ordinates values given sequentially as width, height and depth.

The template object **512**, after being instantiated at step **602**, can subsequently be rotated at step **604** either within a two-dimensional plane or within the three-dimensional space. Said template object **512** is shown in *Figure 7B* equipped with a rotation within two-dimensions only.

Figure 7B

In the example, the template object **512** is rotated by an angle **711** within the plane delimited by the width abscissa **503** and the height co-ordinate **505**. The respective cartesian co-ordinates **701**, **702** of corners **513** and **514** therefore still do not include a depth value. However, even if said respective cartesian values **701**, **702** of said corners **513** and **514** included a depth value, if said depth value is strictly identical in both sets of co-ordinates, said depth value translates the fact that the surface defined by said two corners **513**, **514** is strictly parallel to the width abscissa **503** and the height ordinate **505**, and strictly perpendicular to the depth abscissa **504** and thus, template object **512** is still positioned within a two-dimensional plane within the three-dimensional space. In the example, the two-dimensional rotation is carried out as the lower right-hand corner **712** of template object **512** is chosen as the centre of rotation, or origin of the angle **711**. Said centre of rotation can be arbitrarily positioned within the three-dimensional space and will be easily implemented by those skilled in the art. After template object **512** is rotated by angle **711**, the cartesian co-ordinates **701**, **702** of corners **513**, **514** are respectively (0,2,0) and (8,4,0).

Alternatively, the 3-D text templates **512** is shown in *Figure 7C* rotated within the three-dimensional space.

Figure 7C

In addition to the rotation within a two-dimensional plane, corners **513** and **514** are respectively given differing depth value. In effect, template object **512** rotates relative to corner **712** as the point of origin of the rotation angle **711** and also rotates relative to the median axis **721** of the two-dimensional surface delimited by template object **512** according to the rotation angle **722**. Consequently, the respective cartesian co-ordinates **701**, **702** of corner **513** and corner **514** now vary to a fairly large extent. In the example, after the template object **512** is rotated by angles **711** and **722**, corner **513** has cartesian co-ordinate values **701** of (1, 5, 5) and corner **514** has cartesian co-ordinate values **702** of (9, 2, 4).

Two-dimensional and three-dimensional rotation of objects, whether said objects are themselves two-dimensional or three-dimensional, should be easily implemented by those skilled in the art. According to the invention, template object **512** can be further defined according to step **606**, wherein it can be scaled, ie the total surface delimited by the four corners of template object **512** can be increased or decreased. The template object **512** is shown in *Figure 7D* scaled within the 3-D space instantiated at step **512**.

Figure 7D

In the example, the template does not require two-dimensional or three-dimensional rotation but the operator or system **101** is aware that further three-dimensional objects will require implementing within the three-

dimensional space and thus template object **512** requires additional depth. The "depth" cartesian value of corners **513** and **514** is therefore implemented in such a way that it is identical for each respective corner. In the example, the default respective cartesian values **701**, **702** of corner **513** and corner **514** were (0, 0, 0) and (10, 5, 0) thus a depth value of '3' is added, such that said respective cartesian values **701**, **702** of corner **513** and corner **514** are now (0, 0, 3) and (10, 5, 3).

According to the present invention, it is also known to the user of system **101** that the standard surface of template object **512**, upon its instantiation, is too large and must be decreased. Consequently, said user inputs a scaling percentage or clicks with mouse **106** or stylus **102** and table **103** on said template object **512**, or a corner thereof and subsequently reduces the total surface of template object **512** in such a way that each corner of template object **512** is brought closer to the imaginary centre **731** of the surface delimited by template object **512** by an identical ratio, known to those skilled in the art as the aspect ratio. Inversely, if the total surface of template object **512**, upon its instantiation, was too small then the scaling operation would inverse the previous mechanism and the four corners of said template object **512** would extend away from said imaginary centre **731** of the surface delimited by template object **512** by an identical ratio also known to those skilled in the art as said aspect ratio. In the example, as template object **512** is scaled, the respective cartesian co-ordinates **701**, **702** of corners **513** and **514** are amended by means of the aspect ratio to (3,2,3) and (8,3,3).

An example of the graphical user interface (GUI) of the 3-D text application **302** displayed on the output monitor **104** subsequently to the

operations performed according to steps **601** to **609** and further detailed in *Figures 7A* to *7D* is shown in *Figure 8*.

Figure 8

The results of operations performed according to steps **601** to **609** are previewed at wireframe quality, i.e. vectored lines, within the visualisation window **502**. Dotted lines **801** link the corners **513**, **514** to the width abscissa **503**, the depth abscissa **504** and the height ordinate **505** within the three-dimensional space so as to visualise the respective positions of said corners relative to said abscissas and ordinate, in addition to the overlayed cartesian co-ordinates **701**, **702**. Said rotating and scaling operations according to steps **603** to **606** can be performed either by means of clicking with mouse **106** or a combination of stylus **102** with tablet **103** onto template object **512** within window **502** and accomplishing said operations by means of motions applied to said input means or, alternatively, clicking with mouse **106** or a combination of stylus **102** with tablet **103** onto the 'template' entry **802** in object referencing column **508** within window **506**.

Upon clicking on said 'template' entry **802**, a third window **803**, also known to those skilled in the art as a 'drop-down' menu, displays the properties of the template object **512** within the three-dimensional space, which are stored in the main memory **204** as part of the 3-D text template **303** being edited. Said properties include a template properties referencing column **804** and a template property value column **805**. Said properties refer to rotating, scaling and page behaviour operations according to steps **603** through to **609**. According to the invention, each entry in said property value column **804** may be selected for editing by means of stylus **102** and tablet

103, keyboard **105**, or mouse **106** or a combination thereof.

In the example, the 3-D text template object **303** is defined and its properties are amended as was previously explained in *Figure 7D*. Accordingly, the value of the two-dimensional rotation property is null, as no rotation is required at all for the purpose intended. The value of the scaling property is 'seventy-five percent', indicating that the default surface of the template object **512** was uniformly reduced by 25%. The page behaviour mode selected according to step **608** is 'fixed' mode, as the text to be inputted in template object **303** must appear strictly identical at all times for the purpose intended, and thus the value of the behaviour property is 'fixed'.

Referring back to *Figure 6*, the 3-D text template **303** is now fully defined by means of its properties and the final cartesian co-ordinates **701**, **702** within the three-dimensional space. Further to the definition of the 3-D text template, the text which will be contained within said template must now also be defined with properties according to step **405**. The corresponding actions performed by the 3-D text applications **302** in order to define the 3-D text properties in the 3-D text template are detailed in *Figure 9*.

Figure 9

At step **901**, a font is chosen with which to format the text which will be inputted in the 3-D text template as a string of ASCII characters. Said font identifies a specific shape with which to format the standard ASCII characters and is well known to those skilled in the art. Many different types of fonts exists, one of which is particularly well known to those skilled in the art as "True Type Font". Upon choosing an appropriate font at step **901**, a font size is indicated at step **902**. Said font size defines the size with which to render

every inputted ASCII character according to the font chosen at step **901**, and is traditionally expressed as the number of dots, or pixels, with which to model said ASCII character. Formatting operations performed according to steps **901** and **902** are typical text formatting operations carried out within a two-dimensional plane, such as within a word processor.

A string of ASCII characters is shown in *Figure 10A* equipped with a font and a font size. The string of ASCII characters "ABC123" **1001** is shown within a two-dimensional plane defined by the width abscissa **503** and the height ordinate **504**.

Figure 10A

Referring back to *Figure 9*, at step **903**, the shape of every ASCII character formatted according to the font and size respectively chosen at steps **901** and **902** and shown in *Figure 10A* are vectorised, ie every outline of said shape is divided into a number of vertices such that said outline is divided into a number of segments. As the vectorisation of the shape completes, the vectorised shape is then tesselated into a number of polygons, with said number of polygons depending upon the final rendering resolution.

The string of ASCII characters **1001** equipped with a font and a font size is shown in *Figure 10B*. As the properties of two-dimensional 3-D text template **303** were set according to step **404**, the string of ASCII characters "ABC123" **1001** is previewed in the rendered template object **512** defined within the three-dimensional space defined by the width abscissa **503**, the height ordinate **505** and the depth abcissa **504**. The vectorization and tesselation operations of step **903** are then implemented for the purpose of

previewing the string **1001** within the visualisation window **502** and rendering said string upon completing the formatting operations according to steps **404** to **407**. Said previewed string **1001** is thus now equipped with a depth value **1011** equal to the depth value of template object **512**.

Figure 10B

Referring back to *Figure 9*, a question is asked at step **904** which asks whether an extrusion operation should be performed on the three-dimensional text. If the question of step **904** is answered negatively, control is directed to the next question at step **906**. Alternatively, if the question of step **904** is answered positively, then an extrusion operation is required, which increases the thickness of the three-dimensional text. In effect, a copy of the vertices defined within the two-dimensional plane defined by the template object **512** is created and offset along an axis strictly perpendicular to the surface of the template by a distance equal to the extrusion value, and implemented along an axis strictly parallel to the existing template. The respective vertices contained within the first template **512** and the copies thereof are subsequently linked by means of individual lines strictly parallel to the depth abscissa **504** and the surface said parallel joining lines define are subsequently tesselated into polygons. According to the invention, the extrusion depth may be input within windows **506** by means of keyboard **105** or within windows **502** by means of miles **106** or a combination of stylus **102** and tablet **103**.

The string of ASCII characters **1001** equipped with a depth is shown in *Figure 10C*. The string of ASCII characters "ABC123" **1001** is shown within the template object **512** and extruded by a depth value of 'one' in the

example. Consequently, the vertices defining the outlines of the ASCII characters within string **1001** are copied and said copied vertices **1021** are offset by a depth value of 'one' along an axis **1022** strictly parallel to the depth abcissa **504** and strictly perpendicular to the height ordinate **505** and the width abcissa **503**. If the template object **512** was rotated either in a two-dimensional plane or within the three dimensional space, the vertices would be offset along an axis strictly perpendicular to either of the median axes **721**, **1023** of template object **512** and subsequently aligned so that the vectored outlines they define are strictly parallel to the vectored outlines within said template object **512**.

Figure 10C

Referring back to *Figure 9*, a question is asked at step **906** as to whether the 3-D text should be rendered with a specific texture. If the question at step **906** is answered negatively, then control proceeds to the next and last question at step **908**. Alternatively, if the question of step **906** is answered positively, then a texture **306** is referenced with which to equip the polygons which define the 3-D text. Said texture is traditionally a bitmap file which is applied to the surface of said polygons so as to provide any three-dimensional object with volume and density.

At step **908**, a final question is asked as to whether the textured 3-D text requires an artificial light source. If the question of step **908** is answered positively, artificial lighting properties are inputted which traditionally include the cartesian co-ordinates of the light source itself within the three-dimensional space, the intensity of the light source expressed as a percentage of the default ambient light within the three-dimensional space

and the colour of said artificial light. Artificial lighting of three-dimensional objects within a three-dimensional space will be easily implemented by those skilled in the art, along with further refinements of the operation performed at step **909**, such as multiple artificial light sources, adjustable radiosity and luminosity and light diffusion type and others, all of which are also claimed by the present invention.

Figure 10D

The string of ASCII characters **1001** equipped with an extrusion **1021** is shown in *Figure 10D*. In the example, the artificial light source **1041** is equipped with cartesian co-ordinate values **1042** of (6, 4, 10) within the three dimensional space, such that it is more or less centrally positioned in front of template object **512**. Said artificial light source is oriented towards the template object **512** and is given an arbitrary brightness of one hundred and twenty-five percent, i.e. twenty-five percent brighter than the ambient light within the three-dimensional space. The 3-D text application **302** subsequently computes the surfaces **1043** which are artificially brightened and the surfaces **1044** which are artificially shadowed. Said surfaces are composed of polygons, the extremities of which are the vertices of vectorized and tessellated ASCII characters **1001** and the extruded vertices **1021** of vectorized and tessellated ASCII characters **1001**.

Figure 11

The results of operations performed according to steps **601** to **609** and subsequently according to steps **901** to **909** are previewed at an intermediate quality, i.e. wherein the polygons of the wireframe of each ASCII character

within template object **512** are textured and lighted at an intermediate resolution, within the visualisation window **502**. According to the invention, any of the formatting operations performed according to steps **601** to **609** and subsequently **901** to **909** may be previewed within window **502** at a minimum wireframe rendering quality or at a maximum resolution rendering quality or any rendering level comprised within said minimum and maximum levels, depending upon the configuration of the system **101**.

The font selection and font size selection operations according to steps **901** to **902** can be performed either by means of clicking with mouse **106** or a combination of stylus **102** with tablet **103** onto template object **512** within window **502** and accomplishing said operations by means of motions applied to said input means or, alternatively, clicking with mouse **106** or a combination of stylus **102** with tablet **103** onto the 'text' entry **1101** in object referencing column **508** within window **506**. In order to visualise the forthcoming formatting operations according to steps **904** through to **909**, a temporary string 'LLLNNN' **1102** is inputted by means of keyboard **105** into the object value column **510** relating to the 'text' entry **1101** in object referencing column **508**. Upon inputting the string, said string **1102** is rendered within the template object **512** within window **502** as vectorized and tessellated 3-D text **1103**.

Upon clicking on said 'text' entry, a third window **1104** displays the properties of the 3-D text **1103** rendered within the template object **512**, which are stored in the main memory **204** as part of the 3-D text template **303** being edited, the properties of which were defined at steps **601** to **609**. Said properties include a text properties referencing column **1105** and a text property value column **1106**. Said properties refer to extrusion, texture and

lighting operations according to steps **904** through to **909**. According to the invention, each entry in said property value column **1105** may be selected for editing by means of stylus **102** and tablet **103**, keyboard **105**, or mouse **106** or a combination thereof.

In the example, the 3-D text **1103** within the 3-D text template **303** is defined and its properties are amended as was previously explained in *Figures 10C* and *10D*. Accordingly, the value of the extrusion property is one. The value of the texture property is 'steel', indicating that all the polygons of 3-D text **1103** are to be overlayed with a bitmap image configured to represent a steel aspect.

The value of the light source's brightness selected according to step **909** is 125%, as was previously explained. Dotted lines **1107** link the artificial light source **1041** to the width abscissa **503** and the depth abscissa **504** within the three-dimensional space, in addition to the overlayed cartesian co-ordinates **1042**. Upon completing the definition of the artificial lighting, the complete set of 3-D text formatting properties may now be appended to the properties of the 3-D text template **303** according to step **406**, which is further detailed in *Figure 12*.

Figure 12

Depending upon the level of proficiency of the user of system **101** in defining a 3-D text template **303** and formatting 3-D text therein, many successive attempts at finalising the respective properties thereof may be required. Therefore, a question is asked at step **1201** as to whether the 3-D text template **303** previewed as template object **512** equipped with formatted 3-D text **1103** within window **502** is acceptable for its intended purpose in its

current configuration. If the question at step **1201** is answered negatively, then at step **1202** the 3-D text template properties are amended according to operations performed at steps **603** through to **609** or, alternatively, the 3-D text formatting properties are amended according to operations performed at steps **901** through to **909**. According to the invention, the respective formatting properties of the 3-D text template and the 3-D text can be amended independently from one another, by means of alternatively selecting the "template" entry **802** in the object referencing column **508** so as to amend the template properties and selecting the "text" entry **1101** in said object referencing column **508** in order to amend the text properties. Upon completing the amendments at step **1202**, control is returned to the question of step **1201**, wherein said amendments are again previewed and assessed until such time as the question of step **1201** is answered positively and control is subsequently directed to step **1203**.

At said step **1203**, the 3-D text template **303** is named as a template type **805** in object type column **509** by system 101's user in order to reference said template as a specifically defined template, as opposed to a default template, which may therefore be retrieved at step **403** at a later session of 3-D text application **302**.

Said template type **805** is an arbitrary string of alpha numerical characters and, in the example shown, the user intends to use said template to display three capital letters and three numbers, thus the template is give the type "LLLNNN". At step **1204**, the 3-D text template **303** properties, including the 3-D text formatting properties, are written in an internal medium, such as hard disk drive **205**, or an external medium such as floppy disk **112**, or a combination thereof.

At step **1205**, the specific template is referenced in object database **304** by means of the type **805** which uniquely identifies said specific template **303** amongst any other default or specific template contained therein.

Referring back to *Figure 4*, if the question asked at step **403** in order to determine if an existing template, ie a specific template, should be retrieved is answered positively then 3-D text application **302** prompts the user of system **101** for the template reference and, upon retrieving the properties of said specific template, 3-D text application **302** subsequently displays said specific template within GUI **501** according to said properties. A GUI **501** wherein a specific template according to the invention is displayed is shown in *Figure 13*.

Figure 13

As previously detailed, the GUI **501** divides the display area of output monitor **104** into multiple windows. The visualisation window **502** shows the wireframe outline **512** of the 3-D text template **303** defined within the three-dimensional space according to the properties retrieved at step **403** and/or the properties written at step **406**.

The second window **506** displays the contents of the page of the objects database **304** relating to the specific template **303**. Said specific template is an object amongst a plurality of potential objects within the three dimensional space and is thus referenced as the first **1301** of said objects within the three dimensional space in column **507**, as a template **1302** in column **508**, and as the specific template to be equipped with three letters and three numbers 'LLLNNN' **1303** in column **509**.

No value is required in column **510**, as template **303** is an object which does not contain an overall value-driven property. However, the timecode **1304** '0:00:00:01' expressed as minutes, seconds, tenths of seconds and individual frames in column **511** indicates that template **303** is to be rendered in the first possible frame after video-synchronisation with the broadcast shown in real-time in high-quality monitor **108**.

In a preferred embodiment of the present invention, a third window **1305**, which is another visualisation window, is displayed within GUI **501**. Said window shows the template object **512** rendered in two dimensions only, for the purpose of editing the ASCII characters which will equip template **303** and verify the correct text content and formatting of the template before it is rendered at step **408**. It can be observed that the entry in the value column **510** corresponding to the text object is empty and so windows **502** and **1305** only display the wireframe outline **512** of 3-D text template.

The 3-D text template **303** according to the invention is therefore retrieved and rendered, and includes text formatting properties such that any string of ASCII characters inputted in the value column **510** corresponding to the text object is rendered within said template according to said formatting properties, thus is rendered in three dimensions. Said 3-D text rendering is further detailed in *Figure 14*.

Figure 14

It was previously explained that each entry in columns **507** to **511** may be selected for editing by means of stylus **102** and tablet **103**, keyboard **105**, or mouse **106** or a combination thereof.

Therefore, according to the present invention, upon selecting the entry **1401** in the value column **510** corresponding to the text object and inputting a string of ASCII characters "ABC123" **1402** by means of keyboard **105**, said string **1402** is immediately rendered as three-dimensional text **1403** within the template object **512** within windows **502** and **1305** according to the 3-D text properties contained within 3-D text template **303**.

It was previously mentioned that additional three-dimensional objects may be implemented within the three-dimensional space within which template object **512** is located. Said implementation of additional objects is shown in *Figure 15*.

Figure 15

The 3-D text template is defined within the three-dimensional space and is a two-dimensional object within said space. Said space may include further two- or three-dimensional objects in addition to said template and, in the example, the topic of the broadcast to be equipped with the titling composited according to the invention is global. An 'earth' object is thus implemented by system 101's user, which consists of a globe made of polygons, known to those skilled in the art as a mesh, overlayed with a texture depicting a geographical map of the world.

Said implementation requires the initial referencing of said 'earth' object in the second window **506**. The 'earth' object is equipped with a unique reference (**1501**) within referencing column **507**, to differentiate it from the 3-D template and the ASCII string within database **304**. The 'earth' object is subsequently identified within referencing column **508** as globe **1502**. The standard mesh **305** stored in the main memory **204** which is used to build the

'earth' object is then pointed at by means of the mesh designation **1503**, i.e. a three-dimensional volume bounded by surfaces tessellated into polygons within type column **509**. The mesh is scaled to 25% of its default size in order to fit the design requirements of the composited template, and thus its value is inputted as 25% (**1504**) within value column **510**. Finally, the timecode **1505** '0:00:00:01' expressed as minutes, seconds, tenths of seconds and individual frames in column **511** indicates that the 'earth' object is to be rendered in the first possible frame after video-synchronisation with the broadcast shown in real-time in high-quality monitor **108**, similarly to the 3-D template.

As the 'earth' object is now defined within the three-dimensional space, its implementation also requires the referencing of the texture **306** to be applied onto the corresponding mesh **1503** in the second window **506**. The 'earth' texture is equipped with a unique reference (**1506**) within referencing column **507**, to differentiate it from the 3-D template, the ASCII string and the earth object's mesh within database **304**. The 'earth' texture is subsequently identified within referencing column **508** as a texture **1507**. The 'earth' object is then typified as a bitmapped texture **1508**, i.e. a two-dimensional image constructed from individual pixels, within type column **509**. In order to differentiate the texture to be applied to the 'earth' object from any other texture **306** stored in main memory **204**, the bitmap filename is inputted as its value (**1509**) within value column **510**. Finally, the timecode **1510** '0:00:00:01' expressed as minutes, seconds, tenths of seconds and individual frames in column **511** indicates that the 'earth' texture is to be applied to the 'earth' object for rendering in the first possible frame after video-synchronisation with the broadcast shown in real-time in high-quality

monitor **108**, similarly to the 3-D template.

As properties of the new 'earth' object are inputted and subsequently written within objects database **304**, said 'earth' object is rendered within window **502** according to the level of rendering quality indicated for preview as a three-dimensional model **1511**. In the example, said preview rendering quality is indicated as good, and a fully-rendered 'earth' object **1511** is rendered within window **502** in conjunction with the template object **512** and 3-D text **1403**.

As previously explained, window **1305** only shows the template **303** rendered in two dimensions for the purpose of editing the ASCII characters which equip template **303** and verify the correct text content and formatting of the template before it is fully rendered at step **408**. The 'earth' object **1511** is thus not rendered within said window **1305**.

In the example, the 3-D template **303** is now ready for titling the broadcast shown in monitor **108**. A frame of the broadcast which is titled in real-time with a 3-D template according to the invention is shown in *Figure 16*.

Figure 16

System **101** is configured to equip a live video broadcast with computer-generated graphical titles. Consequently, upon obtaining a satisfying preview in window **502** on VDU **104**, system **101** user instructs 3-D text application **302** to equip the next frame **1601** of the video footage broadcast in real-time with the composited title **1602** comprising 3-D text template **303** equipped with the 'ABC123' string of ASCII characters **1402** inputted at step **407** and rendered at step **408** according to the 3-D text template properties retrieved at step **403** or written at step **406**, and other

three-dimensional objects referenced within the same page of the objects database **304** as said template **303**, such as the 'earth' object **1511**.

In the example, a presenter **1603** is reading news in front of a blue screen according to the prior art, such that a static or moving background image may be overlayed, along with the title **1602** according to the invention. The next available frame displayed by broadcast-quality monitor **108** therefore shows a presenter **1603** along with said title **1602**, as said 3-D template according to the invention is rendered in real-time.

In the example, a new information develops during the live broadcast and the text value **1402** within the 3-D template **303** in title **1602** requires editing and rendering in real-time as said information develops. The editing of the text contents of the 3-D template within title **1602** is shown in *Figure 17*.

Figure 17

As the new information develops and the text contents within the 3-D template require editing in real-time to reflect the changes in the information, according to the present invention, upon selecting the entry **1401** in the value column **510** corresponding to the text object and inputting a new string of ASCII characters "DEF456" **1701** to replace the previous string of ASCII characters "ABC123" **1402** by means of keyboard **105**, said string **1701** is immediately rendered as three-dimensional text **1702** within the template object **512** within windows **502** and **1305** according to the 3-D text properties contained within 3-D text template **303**. Accordingly, the title **1602** is rendered with the new three-dimensional text **1702** as said rendering occurs in real-time according to the invention.

A frame titled in real-time with a 3-D template according to the invention is shown in *Figure 18*, which is subsequent to the previous frame of the broadcast shown in *Figure 16*, wherein the text which equipped the 3-D template rendered in said previous frame has been edited in real-time.

Figure 18

3-D text application **302** equips the next frame **1801** of the video footage broadcast in real-time with the composited title **1802** comprising 3-D text template **303** equipped with the 'DEF456' string of ASCII characters **1701** inputted at step **407** and rendered at step **408** according to the 3-D text template properties retrieved at step **403** or written at step **406**, and other three-dimensional objects referenced within the same page of the objects database **304** as said template **303**, such as the 'earth' object **1511**.

The next available frame displayed on broadcast-quality monitor **108** therefore shows the same presenter **1603** along with the composited title **1802**, as said 3-D template according to the invention is rendered in real-time.

Alternatively, 3-D text application **302** equips the next frame **1801** of the video footage broadcast in real-time with the composited title **1802** comprising 3-D text template **303** equipped with any string of ASCII characters inputted at step **407** and rendered at step **408** according to the 3-D text template properties retrieved at step **403** or written at step **406**, and other three-dimensional objects referenced within the same page of the objects database **304** as said template **303**, such as the 'earth' object **1511**.

In a preferred embodiment of the present invention, the 3-D text application **302** can be linked to any real-time information database known to those skilled in the art, such that said link configures the selection and edition

of the entry **1401** in the value column **510** corresponding to the text object to automatically update said entry **1401** upon the contents of said information database being updated in real-time. The three-dimensional text generated in real-time from said entry **1401** is therefore updated accordingly and the corresponding title **1802** dynamically reflects updates of said real-time information database.

Claims

1. Apparatus for generating three-dimensional text within images composited in real time, comprising means for generating said three-dimensional text from one or a plurality of text formatting templates, including processing means and storage means, wherein

said storage means stores said text formatting templates and instructions for said processing means;

said instructions configure said processing means to perform the steps of:

defining one of said text formatting templates as a two-dimensional template equipped with cartesian co-ordinates within a three-dimensional space;

equipping said defined text formatting template with three-dimensional preferences with which to format text to be included in said template;

equipping said defined text formatting template with said text; and

rendering said two-dimensional template including said text formatted according to said three-dimensional preferences within said three-dimensional space.

2. Apparatus according to claim **1**, wherein said one or a plurality of text formatting templates is a two-dimensional plane delimited by two sets of two parallel segments of an identical length, the respective extremities of the segments of the first set intersecting the respective extremities of the segments of the second set at a right angle.

3. Apparatus according to claims **1** and **2**, wherein said defining step of one of said text formatting templates as a two-dimensional template equipped with cartesian co-ordinates within a three-dimensional space comprises either a two-dimensional rotation, or a three-dimensional rotation, or a scaling operation or any combination thereof.

4. Apparatus according to claim **3**, wherein said two-dimensional rotation, three-dimensional rotation and scaling operation are implemented either by motion input or alphanumerical input or any combination thereof.

5. Apparatus according to claim **1**, wherein said three-dimensional preferences with which to format text to be included in said template comprises either an extrusion depth, or one or a plurality of textures with which to equip said text, or one or a plurality of light sources with which to light said text, or any combination thereof.

6. Apparatus according to claim **5**, wherein said extrusion depth, one or a plurality of textures with which to equip said text and one or a plurality of light sources with which to light said text are implemented either by motion input or alphanumerical input or any combination thereof.

7. Apparatus according to claim **1**, wherein said text is one or a plurality of ASCII characters equipped with a font and font size, every outline of which is subsequently divided into a number of vertices, such that said every outline is divided into a number of segments that are tesselated into a number of polygons, with said number of polygons depending upon the final

rendering resolution.

8. Apparatus according to claim **1**, wherein said text equipping said defined text formatting template is alphanumerical data inputted either by means of physical input means or by means of a data source linked to said text formatting template.

9. Apparatus according to claim **1**, wherein said equipping step of said defined text formatting template with said text is performed in real time.

10. Apparatus according to claim **1**, wherein said rendering step of said two-dimensional template including said text formatted according to said three-dimensional preferences within said three-dimensional space is performed in real time.

11. A method of generating three-dimensional text within images composited in real time, comprising means for generating said three-dimensional text from one or a plurality of text formatting templates, including processing means and storage means, wherein

said storage means stores said text formatting templates and instructions for said processing means;

said instructions configure said processing means to perform the steps of:

defining one of said text formatting templates as a two-dimensional template equipped with cartesian co-ordinates within a three-dimensional

space;

equipping said defined text formatting template with three-dimensional preferences with which to format text to be included in said template;

equipping said defined text formatting template with said text; and

rendering said two-dimensional template including said text formatted according to said three-dimensional preferences within said three-dimensional space.

12. A method according to claim **11**, wherein said one or a plurality of text formatting templates is a two-dimensional plane delimited by two sets of two parallel segments of an identical length, the respective extremities of the segments of the first set intersecting the respective extremities of the segments of the second set at a right angle.

13. A method according to claims **11** and **12**, wherein said defining step of one of said text formatting templates as a two-dimensional template equipped with cartesian co-ordinates within a three-dimensional space comprises either a two-dimensional rotation, or a three-dimensional rotation, or a scaling operation or any combination thereof.

14. A method according to claim **13**, wherein said two-dimensional rotation, three-dimensional rotation and scaling operation are implemented either by motion input or alphanumerical input or any combination thereof.

15. A method according to claim **11**, wherein said three-dimensional preferences with which to format text to be included in said template comprises either an extrusion depth, or one or a plurality of textures with which to equip said text, or one or a plurality of light sources with which to light said text, or any combination thereof.

16. A method according to claim **15**, wherein said extrusion depth, one or a plurality of textures with which to equip said text and one or a plurality of light sources with which to light said text are implemented either by motion input or alphanumerical input or any combination thereof.

17. A method according to claim **11**, wherein said text is one or a plurality of ASCII characters equipped with a font and font size, every outline of which is subsequently divided into a number of vertices, such that said every outline is divided into a number of segments that are tesselated into a number of polygons, with said number of polygons depending upon the final rendering resolution.

18. A method according to claim **11**, wherein said text equipping said defined text formatting template is alphanumerical data inputted either by means of physical input means or by means of a data source linked to said text formatting template.

19. A method according to claim **11**, wherein said equipping step of said defined text formatting template with said text is performed in real time.

20. A method according to claim **11**, wherein said rendering step of said two-dimensional template including said text formatted according to said three-dimensional preferences within said three-dimensional space is performed in real time.

21. A computer-readable medium having computer-readable instructions executable by a computer such that, when executing said instructions, a computer will perform the steps of

defining a text formatting template as a two-dimensional template equipped with cartesian co-ordinates within a three-dimensional space;

equipping said defined text formatting template with three-dimensional preferences with which to format text to be included in said template;

equipping said defined text formatting template with said text; and

rendering said two-dimensional template including said text formatted according to said three-dimensional preferences within said three-dimensional space.

22. A computer-readable memory system having computer-readable data stored therein, comprising

one or a plurality of textures;

one or a plurality of object meshes;

an objects database;

one or a plurality of 3D text templates; and

a 3D text application with which to define, configure and render said 3D text templates.

23. A computer-readable memory system according to claim **22**, wherein said program instructions are configured to;

define a text formatting templates as a two-dimensional template equipped with cartesian co-ordinates within a three-dimensional space;

equip said defined text formatting template with three-dimensional preferences with which to format text to be included in said template;

equip said defined text formatting template with said text; and

render said two-dimensional template including said text formatted according to said three-dimensional preferences within said three-dimensional space.

Application No: GB 0109626.2
Claims searched: 1,11,21

Examiner: Joe McCann
Date of search: 5 October 2001

Patents Act 1977
Search Report under Section 17

Databases searched:

UK Patent Office collections, including GB, EP, WO & US patent specifications, in:

UK Cl (Ed.S): H4T(TBBA, TBEC, TDGA, TDXX)

Int Cl (Ed.7):

Other: Online: WPI, EPODOC, JAPIO, Internet

Documents considered to be relevant:

Category	Identity of document and relevant passage	Relevant to claims
X	GB 2332348A (ZYRIS PLC) - see abstract	1,11,21
A	www.calstatela.edu/ats/real/develop/realtext3d.htm - Creating RealText 3D	1,11,21

X	Document indicating lack of novelty or inventive step	A	Document indicating technological background and/or state of the art.
Y	Document indicating lack of inventive step if combined with one or more other documents of same category.	P	Document published on or after the declared priority date but before the filing date of this invention.
&	Member of the same patent family	E	Patent document published on or after, but with priority date earlier than, the filing date of this application.