(12) INTERNATIONAL APPLICATION PUBLISHED UNDER THE PATENT COOPERATION TREATY (PCT)

(19) **World Intellectual Property Organization**
International Bureau

(43) **International Publication Date**
7 September 2001 (07.09.2001)

PCT

(10) **International Publication Number**
WO 01/65279 A1

(51) **International Patent Classification**^{7}: **G01V 1/02**, 1/30, 1/37

(21) **International Application Number:** PCT/FI01/00214

(22) **International Filing Date:** 5 March 2001 (05.03.2001)

(25) **Filing Language:** English

(26) **Publication Language:** English

(30) **Priority Data:**

09/518,680	3 March 2000 (03.03.2000)	US
09/725,169	29 November 2000 (29.11.2000)	US

(71) **Applicant and**
(72) **Inventor: COSMA, Calin** [FI/FI]; Taipaleentie 127, FIN-01860 Perttula (FI).

(74) **Agent: HEINÄNEN OY**; Annankatu 31-33 C, FIN-00100 Helsinki (FI).

(81) **Designated States** *(national)*: AE, AG, AL, AM, AT, AU, AZ, BA, BB, BG, BR, BY, BZ, CA, CH, CN, CR, CU, CZ, DE, DK, DM, DZ, EE, ES, FI, GB, GD, GE, GH, GM, HR, HU, ID, IL, IN, IS, JP, KE, KG, KP, KR, KZ, LC, LK, LR, LS, LT, LU, LV, MA, MD, MG, MK, MN, MW, MX, MZ, NO, NZ, PL, PT, RO, RU, SD, SE, SG, SI, SK, SL, TJ, TM, TR, TT, TZ, UA, UG, US, UZ, VN, YU, ZA, ZW.

(84) **Designated States** *(regional)*: ARIPO patent (GH, GM, KE, LS, MW, MZ, SD, SL, SZ, TZ, UG, ZW), Eurasian patent (AM, AZ, BY, KG, KZ, MD, RU, TJ, TM), European patent (AT, BE, CH, CY, DE, DK, ES, FI, FR, GB, GR, IE, IT, LU, MC, NL, PT, SE, TR), OAPI patent (BF, BJ, CF, CG, CI, CM, GA, GN, GW, ML, MR, NE, SN, TD, TG).

Published:
- *with international search report*
- *before the expiration of the time limit for amending the claims and to be republished in the event of receipt of amendments*

[Continued on next page]

(54) Title: SWEPT IMPACT SEISMIC METHOD AND APPARATUS

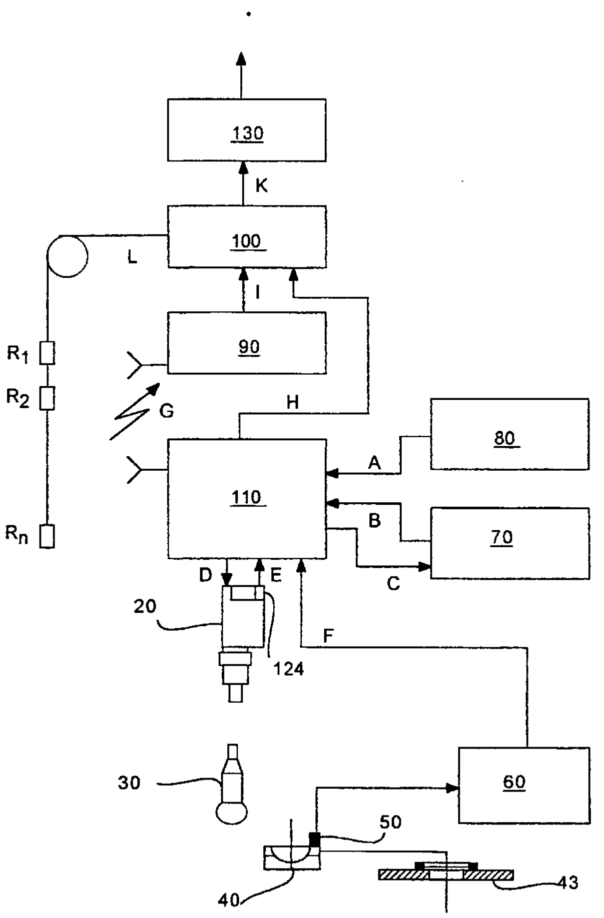

(57) **Abstract:** Method and apparatus of seismic investigation using the Swept Impact Seismic Technique in which method the investigation is performed by means of a series of controlled impact sequences applied at different points of the investigation site, the impacts being generated with an impact device (20, 30, 40), and the operation of the impact device being controlled with a control system (110, 70) by means of an electric control signal.

SWEPT IMPACT SEISMIC METHOD AND APPARATUS

This invention relates to Swept Impact Seismic Techniques (SIST), and especially to the swept impact seismic method and apparatus for performing SIST according to the preambles of claims 1 and 14.

High-resolution seismic surveys are carried out for locating and delineating ore and hydrocarbon deposits, for assessing the constructability of rock and earth and for locating porous and possibly hydraulically conductive features with applications such as mining and exploration, rock engineering, monitoring of excavation works, disposal of hazardous waste.

The diversity of the applications of high-resolution seismics requires the data collection to be performed in very diverse conditions, e.g., in swamps, shallow fluid, on soil, gravel, pavement and rock, on tunnel walls and floors; in vertical, horizontal, up-going and down-going boreholes, drilled from the surface and from tunnels. The equipment used for such seismic applications must be able to operate in confined spaces and boreholes. The acquisition methods must be non-destructive and environmentally friendly. The apparatus should be compact and mobile in construction and mining site conditions. Speed and routine are of the essence, to make the operation cost-effective. These are prerequisites for viable small-scale seismic investigation techniques.

A typical range for high-resolution surveys varies from tens to hundreds of meters, which with favorable site conditions may be extended to 2 km. The minimum size of targets is of the order of meters, for localized anomalies, and fractions of a meter for laterally extensive features, e.g. fracture zones. To reach the desired resolution, small-scale seismic data must contain high frequencies of several hundreds hertz (Hz) or more, which are usually associated with low-power acoustic sources. Conversely, the sources must deliver sufficient energy to carry the high frequencies through occasional highly attenuative media and reach the desired investigation range.

The high frequency and high-energy requirements can be both fulfilled if the signal energy is built up over time, rather than being emitted as a short burst. The idea of injecting energy over a period of time is common to the techniques known as Vibroseis (Crawford, J.M., Doty, W., and Lee, M.R., 1960. Continuous signal seismograph. Geophysics, 25, p. 95 – 105), Mini-Sosie (Barbier, M.G., Bondon, P., Mellinger, R., Viallix, J.R., 1976. Mini-SOSIE for land seismology. Geophysics Prosp., 24, p. 518 – 527) and SIST (Park, C.B., Miller, R.D., Steeples, D.W. and Black, R.A., 1996. Swept Impact Seismic Technique (SIST). Geophysics, 61, no. 6, p. 1789 – 1803).

The invention produces acoustic waves with high frequency content (up to 1500 Hz) while achieving significant depth penetration. The high frequency content of the signal emitted by a seismic source tends to decrease when the power of the source increases, which makes higher resolution and wide investigation range difficult to achieve simultaneously. The investigation range can however be increased with little or no expense of resolution if the signal energy is built over time, rather than being emitted as a short high-power burst.

With SIST, an impact source generates a series of seismic pulses. However, instead of the pulses being produced at pseudo random time intervals, as with Mini-Sosie, with SIST a monotonous variation of the impact frequency is used, to produce a non-repeatable impact sequence. SIST is, reportedly, more time-efficient than Mini-Sosie.

The monotonous variation of the frequency is a common element of the SIST and Vibroseis techniques. With Vibroseis, the frequency of the seismic signal is continuously varied. Conversely, with SIST, the frequency band of each impact remains essentially the same, while the frequency of the impacts is varied. Compared to Vibroseis, with SIST a firm coupling to the rock or ground is not as critical. This is a clear advantage, as a firm, wide band contact is difficult to achieve in all situations, considering the diversity of experimental conditions encountered in small-scale surveys. Besides, the SIST apparatus is simpler and more portable than a Vibroseis source.

The SIST concept has been tested with shallow reflection applications, at low frequencies. It has also been found that (through several projects carried out by Vibrometric) SIST used with higher frequencies is a viable solution for high-resolution surveys, on ground surface, in underground openings and in boreholes, both methodologically and logistically.

According to the invention, a method of seismic investigation using the swept impact seismic technique is based on a controlled operation of the source, aimed at maximizing the useful signal with respect to all types of noise. The method may comprise measuring the response of an instrument and/or a site to be investigated to a series of controlled impact sequences applied at different points of the site and subsequently adjusting the impact sequences on the basis of the measured responses.

The invention also relates to an apparatus for implementing such a method, comprising a control system comprising measuring means for measuring the response of an instrument and/or a site to be investigated to a series of controlled impact sequences applied at different points of the site and connecting means for connecting the measuring means to a control system, and wherein the control system controls the impact sequences on the basis of the measured responses.

The apparatus may for example be configured to be applied to a surface of the site, which may be a ground surface, above or under water, or the wall of a tunnel or of a constructed structure, or within a borehole.

The device generating the impacts may be an electrically, electromagnetically, hydraulically or pneumatically actuated generator of mechanical impacts.

The apparatus according to the invention can be used in a wide range of applications, including: seismic reflection and refraction, shear and surface wave studies, VSP (Vertically Seismic Profiling) and crosshole measurements and also research and education.

The invention has, for example, following advantages compared to prior art systems: The invention achieves a better first break detection than a sledgehammer. The improvement is obtained by accumulating higher impact energy over a period of time, i.e. the signal to noise ratio increases, and through a fine tuned deconvolution of the signal, in order to minimize the correlation noise.

The invention also gives an excellent reflection source because it obtains equivalent depth or better than would normal explosives caps used for seismics, while maintaining a higher resolution and an increased productivity. The significant depth penetration is achieved by the accumulation of low energy impacts over a period of time.

Significant productivity gains are obtained because the invention is not dependent on the energy of the operator using a sledgehammer or on the lengthy preparation needed to use explosives, such as drilling holes, filling them in, setting up the wires, etc.

For refraction applications, the invented technique is at least 5 to 10 times faster than using a sledgehammer and for reflection more than 10 to 20 times faster than using explosives, depending on the operator.

The reduced number of modules makes some embodiments of the invention portable and highly mobile. It allows jobs to be done faster and in difficult field conditions that would otherwise have been almost inaccessible such as mountainous regions, underground mines, confined areas, etc.

The apparatus according to the invention is an environmentally friendly seismic source. It is a non-destructive alternative that does not create environmental pollution such as chemicals, sound, etc. Legal risks frequently associated with using explosives are eliminated.

The invention also incorporates and upgrades standard rock breaker equipment commonly used in the construction industry. The many thousands of impacts per day used by the Swept Impact Technique require a rugged electromechanical hammer that is already well proven and that also meets established environmental (sound) standards.

The invented apparatus can be used with many seismographs.

Further features of the invention will become apparent from the following description with reference to the accompanying drawings, where

Figure 1 is a schematic diagram of the components of a first embodiment of the apparatus of the invention, intended for surface application;

Figure 2 is an enlarged view of the impact rod and impact plate (30, 40) shown in Figure 1;

Figures 3 and 4 are schematic block diagrams of parts of the controller block 110 of Figure 1;

Figure 5 is a schematic diagram of an embodiment of apparatus intended for use in conjunction with boreholes;

Figure 6 is a schematic diagram of a modification of the embodiment of Figure 5;

Figure 7 is a fragmentary section of a borehole showing portions of the apparatus suspended therein;

Figure 8 is a mainly sectional view of a hammer portion of the apparatus shown in Figure 7;

Figure 9 is an enlarged fragmentary sectional view of part of the hammer portion of Figure 8;

Figure 10 is a view, mainly in section, of an alternative embodiment of hammer;

Figure 11 is a schematic diagram of a controller unit 110 for use in the embodiment of Figure 6;

Figure 12 presents an electro-hydraulic realization of a Swept Impact Apparatus;

Figure 13 presents a hydraulic scheme of the electro-hydraulic system for debit control;

Figure 14 presents a block diagram of the electro-hydraulic system 600; and

Figure 15 presents an electromagnetic device using the Swept Impact Seismic Technique to generate impacts in boreholes.

Referring to Figure 1, 20 represents an electrically actuated hammer, which may be a conventional electric demolition hammer and fitted with an impact rod 30 generating impact against an impact plate 40. Different impact plates 40 may be applied for hard and soft surfaces respectively. The stroke rate of such a hammer may be varied substantially monotonously by varying the supply voltage, over a range, for example, of 20 - 80 Hz. The energy content of each stroke is typically about 20J to 100 J (depending on the power of the standard mechanical equipment, e.g. hammer). The voltage input to the hammer in line D is controlled by a controller 110 according to signals on line B from a computer 70 and on line C from the controller to the computer. The controller 110 receives electrical power on a line A from a generator 80 or other power source. The controller 110 receives an enable signal on line E from a switch on the hammer 20, to initiate an impact sequence into the hammer. The controller controls the repetition frequency of the impacts by sweeping the potential applied to the hammer on line D over a period equal to the length of the desired impact sequence, which will be typically at least 100 impacts and may contain 500 impacts or more. The hammer is coupled to the rock or other material to be investigated by pressing the impact plate 40 against it through the rod 30.

Signals from the site being mapped are picked up by a receiver transducer 50, are amplified and/or filtered in module 60 and passed on line F to the controller 110 whence they may be passed by a radio link G or a landline H to a receiver 90 which forwards the signals to a seismograph and/or signal recording station 100 including a module which processes the signals and either displays and saves the processed signals or passes them to an optional processing computer 130 for display and storage.

In a variation of the mode of operation, the controller 110 may be decoupled from lines B and C connecting the controller 110 to the computer 70, thereafter the operation of the hammer being controlled by the code previously received from the computer 70 on line B and stored in the memory of the controller 110. The computer 70 is optional and its functions in determining the impact sequence generated by the controller 110 may be built into the latter, with external controls provided for setting up a desired sequence.

Referring further to Figure 1, the hammer unit of this embodiment is again based on a conventional electrical demolition hammer 20, modified by substituting a spherically terminated impact rod 30 in place of the conventional chisel, the spherical termination being fitted with an impact plate 40. This may have a plane sale as shown for engagement with hard surfaces, or protuberances to improve engagement with soft surfaces. The spherical termination allows the plate 40 to articulate so as to Improve engagement with the surface of the test site, typically through about 35 degrees relative to the axis of the impact rod.

Depending on soil characteristics such as hardness and slope, the impact plate 40 may have different characteristics designed to obtain proper acoustic coupling to the surface, which coupling should be as tight as possible to prevent secondary shocks due to recoil of the hammer. For the same reason, a seating plate 43 may be used to secure the impact plate 40 to the rod 30. Modified articulated positioning systems, including weight compensation and/or recoil attenuation devices, can be used for applications requiring the shocks to be applied at an angle to the impact rod axis.

Further details of the impact plate and associated parts are shown in Figure 2. The actuator of the hammer 20 is pressed into impact rod 30, the spherical end of which is held in a socket of the impact plate 40 by the plate 43 secured by bolts 46 through a rubber washer 45.

A trigger device 50 is mounted into the impact plate 40.

The shock rate of the hammer 20 may be varied linearly over a range of f_{min} - f_{max} Hz, by varying the supply voltage. The available range may vary for different hammer types, but the ratio f_{max}:f_{min} shall be no less than 1.5:1. A typical hand held electric demolition hammer delivers about 20 J per impact. The generated frequency range of each impact may extend well beyond 2 kHz.

Referring again to Figure 1, a controller 110 provides a controlled supply voltage to the hammer 20 on line D. The controller is powered via line A from a power generator 80 or alternative electric power source. An impact coding function is generated by a programmable computer 70 on line B and it is either used as such or it is stored in the memory of the controller 110 to be used later.

In either case the controller 110 must receive an enable signal from the operator of the hammer 20 to start the sweep. The operator positions the plate 40 against the surface of the test site and presses a switch 124 on a handle of the hammer which sends a signal on line E to the controller to initiate a sequence of impacts. The controller generates the sequence either according to its own programming or programming received from computer 70 on line B in response to a signal transmitted on line C.

The response of the site is sensed by a chain of seismic signal receivers (accelerometers, geophones or hydrophones) R_1, R_2, . . ., R_n and transmitted to a seismograph 100 via cable L. Recording of response signals is triggered by rectangular pulses generated by the controller 110 and fed to the seismograph 100 on line H.

The trigger sensor 60 is a piezoelectric sensor or geophone incorporated in the trigger device 50, which sensor picks up mechanical shocks corresponding to the impacts for transmission to controller 110 on line F formed by an armored geophysical or coaxial cable.

The controller 110 includes a trigger module (see Fig. 3), a filtering module (see Fig. 4), and a power supply. Referring to Fig. 3, a differential input stage 111 receives the signal on line F from transducer 60. This signal is fed after optional filtering and shaping by a low pass filter 112 and/or a Schmitt trigger 113 to an optical isolation stage 114. The differential input stage rejects common mode noise and permits input sensitivity to be adjusted to avoid clipping of the signal, yet provide adequate amplitude to be detected by the seismograph, which receives the output of stage 114 on line H. The optical isolation protects the seismograph 100 from spikes and transients, while the filtering and shaping reject noise and convert the transducer output into a single rectangular pulse with a fast rising edge which provides a steady timing reference for recording signals from cable L. The rectangular trigger signals may alternatively be modulated and transmitted by a radio transmitter 115 to provide a radio link G (see Fig. 1) to the radio receiver 90 and thence the seismograph 100. The transmitter may be incorporated in the controller 110 as shown or be a separate unit. In either case the seismograph is electrically isolated from the controller so as to reject spikes and noise present on the controller power supply and permitting the seismograph to be independently powered. The seismograph 100 processes the receiver signals on line L, and either displays or saves them, or passes them to an optional processing computer 130 for further processing and storage.

Referring to Figure 4, the switch SW1 selects either a local signal from the controller or a remote signal from the programming computer 70. In the first case a saw tooth generator 116 programmed on the controller panel is enabled on receipt of the signal from switch 124, and the gain and offset of this signal are adjusted by amplifiers 118 and 119. The generator 116 also generates an enable signal applied to the seismograph 100 throughout the sweep via an optoisolator 117. A remote signal from the computer 70 is amplified by a differential input amplifier 125 filtered by a band-pass filter 126 to remove spikes and high frequency noise, and passed to switch SW1 through an optoisolator 123.

The signal selected by switch SW 1 is amplified by amplifier 121 and applied to a phase angle controller 122, which modulates the supply potential of the power delivered to the hammer.

The power supply provides power to the various circuits, and includes an isolated DC/DC converter to power those circuits in direct connection with the seismograph 100 or the computer 70.

In Figure 5, the electric demolition hammer is replaced by a piezo-electric hammer 208, and the control unit which incorporates a generator 210 of high voltage (e.g., 8000 Volt) pulses connected to electrodes between piezo-electric elements 212 secured in a stack between loading blocks 214 and 216. One of the loading blocks 214 is coupled to a casing 218 of the unit, and the other 216 is coupled to the walls of a borehole to be investigated either through perforations 222 in the wall of the casing or by a known motor driven wedge system (not shown). This embodiment is suitable for use in boreholes, and the hammer may be moved through the borehole between successive locations, after releasing the wedge system, if necessary, by means of a cable attached to an eye 21 on the casing.

In Figure 6 the electric demolition hammer of Figure 1 is replaced by a hammer formed by stack of piezoelectric transducer plates 140 secured between two loading blocks 150 and 160. The loading block 150 is coupled to the casing 110 of the unit, while the loading block 160 is coupled to the wall of a borehole in which the unit is inserted through fluid by means of converter 180. In a different realisation of the borehole hammer, this may by coupled to the borehole wall by means of motor driven wedges (not shown in Figure 6). A trigger sensor and local preamplifier are associated with the hammer, conveniently in a housing 500 (see Fig. 7) connected above the hammer by a cable 400 and couplings 190. The housing 500 may also accommodate a pulse generating system described in more detail with reference to Figure 11.

A sequence of high voltage pulses (up to 7 kV) from the pulse generator is applied in parallel to the plates of the stack so that the elongations of the plates produced by the pulses are summed to produce an axial elongation of the stack which is transmitted to the converter 180 and thence to the wall 310 of the borehole 320. Two forms of converter 180 are exemplified, in the embodiment shown in Figures 8 and 9. The impacts are transmitted through a series of perforations in the converter casing, using the fluid filling the borehole as a transmission medium, while in the embodiment of Figure 10 transmission is through a motor driven wedge system. In both cases the leading block 160 provides an inertial mass.

With reference to Figure 8, the stack typically comprises at least 45 piezoelectric plates 140 clamped by a rod 141 between end blocks 142,143 and 144 within a tube 146 within the casing 170. The rod 141 acts as a spring compressing the stack, which on receiving a pulse expands with a force equal to that developed by each plate in the stack, through a stroke equal to the sum of the expansions of the plates. The loading and damping provided by the loading block 150 and a damping element 147 are selected so that maximum displacement occurs downwardly (as seen in the drawings) and reflections in the opposing direction are largely absorbed by the element 147.

In the case of the fluid coupled converter shown in Figs. 7, 8 and 9, the fluid is compressed between plates of a stack of alternating metal plates 181 and 182 (see Fig. 9), of which the plates 181 receive the impacts of the hammer through a rod 184 connected to the block 144, while the plates 182 are stacked, through circular peripheral flanges forming a converter casing and defining openings 185, on the loading block 160. The impacts result in fluid being trapped between facing surfaces 186 and 187 being ejected radially through the openings 185 and impacting on the wall 310. The plates 181 are secured on the rod 184 between nuts 188 and collars 189. An extension of the rod through the loading block 160 supports the latter through an elastic block 161 and washers 162. A further block 163 of similar material as 162 is located between the topmost plate 182 and the block 144. Initial clearance between the surfaces 186 and 187 is typically in the range 1.35 - 2.2 mm for borehole diameters of 33 to 100 mm diameter, while the outer diameter of the converter 180 should be about 2 - 4 mm less than that of the borehole 320. The length of the converter 180 should be about half the wavelength in the piezoelectric stack of the resonant frequency of the piezoelectric cristals, which may for example be about 2100 Hz. This wavelength may be adjusted by suitably selecting the length of the collars 189 and the number of pairs of plates 181 and 182, typically 10 - 15.

In the embodiment of Figure 10, the converter is mechanical, the energy developed by the hammer being transferred radially to the wall of the borehole through wedges 172 located in slots in an extension 172 of the casing 170 and engaging guide slots 173 in a coned surface of the block 144. Typically there are three wedges with 120 degree spacing. The piezoelectric hammer 150 is longitudinally movable within the casing 170 so as either to force the wedges against the wall 310 at a test site or to release them so that the apparatus may be moved longitudinally within the bore 320. A geared motor 190 drives a nut 192 through a coupling 191, the nut in turn driving a screw 193 supporting the hammer 150 within the casing. The motor is reversible and the current it draws is sensed so that when torque rises as the wedges engage the bore wall 310 or the screw is fully retracted, it shuts off.

The controller 110 in Figure 6 functions somewhat similar to that of Figure 1, but differs in its manner of controlling the repetition frequency of the hammer and delivering power to the latter, as shown in Figure 11. In this embodiment the power supply voltage is constant. As well as driving the motor 190 through a motor driver 194 (only for the embodiment of Figure 10, in which it also provides a clamp - unclamp signal controlling the direction of the motor), it charges a capacitor 195 through a rectifier 199, preferably of the voltage doubler type, which capacitor is discharged at a repetition frequency which is programmed as previously described by closing an electronic switch 196, typically a thyristor, and opening an electronic switch 197 to isolate the supply. The capacitor discharges through the primary of a transformer 198 to generate a high voltage pulse across the transducers 140. Advantageously the discharge circuit is tuned to the resonant frequency (e.g. about 2100 Hz) of the transducer stack to increase its efficiency. The switches 196 and 197 are controlled by a timer and logic circuit 189 which also generates trigger signals at each discharge for application to line H to control the seismograph 100.

Utilization of such tools to provide SIST data is discussed further below:

A SIST coded record, $r_c(t)$, can be written as:

$$r_c(t) = \psi(t) * s(t) + n(t) \qquad (1)$$

where $\psi(t)$ is the controlled impact sequence, s(t) is the source signature, e(t) is the earth impulse response and n(t) is the noise. Following Park (Park et al, 1996). A "normal" seismic record, $r_d(t)$, can be obtained by cross-correlating the controlled impact sequence $\psi(t)$ and the coded record $r_c(t)$:

$$r_d(t) = \psi(t) \otimes r_c(t) = \mathrm{ACF}\{\psi(t)\} * s(t) + \psi(t) * n(t) \qquad (2)$$

A key assumption in equation (2) is that the auto-correlation function ACF $\{\psi(t)\}$ = 0 everywhere except at zero-lag. In practice, the degree of compliance with this condition will provide a way to evaluate the performance of various coding schemes.

Several time functions were studied and compared with the linear frequency scheme, prescribed by Park et. al., 1996. In particular, an inversely linear frequency (linear period) was found to be effective. It was noticed during the study that with the linear-period scheme the band (f_{max}:f_{min}) could be narrowed from the prescribed 2:1 (Park et. al., 1996) to about 1.5:1, without an apparent loss of quality. This was done primarily for practical purposes, as a narrower bandwidth simplifies the mechanical construction of the source. In spite of the narrower band, the linear-period sweep led to a more effective cancellation of the correlation noise.

In theory, the high limit of the impact frequency band should be as low as possible, to reduce correlation noise. In practice, it turns out that there are considerable benefits in increasing the impact frequency as much as possible, provided that the quality of the decoded signal does not decrease noticeably.

Two sweep ranges were tested, one of 18 - 30 Hz and the other of 90 - 150 Hz, the sweep duration of the former was 30s, the latter only 6s. The signal quality can be maintained, in fact the time-domain-signal decoded from the 6s sweep looked as clean, or arguably cleaner, than the 30s signal. The characteristics of the noise were the same in both cases. This represents a significant improvement to performance. Since production of a tomographic section of a site being investigated requires thousands of measurements, which have to be recorded, inspected for quality assurance, and decoded. The time needed for all these operations depends on the sweep length.

As in equation (2) $\psi(t) = 1$ at the moments of impact and $\psi(t) = 0$ at any other time, the cross-correlation can be replaced by summing to provide simple "Shift-and-stack" averaging. For purely random noise, the *S/N* of the sum signal will decrease by the square root of the number of impacts. However, in real life, the straight sum may not be the most efficient way to increase the *S/N* ratio. As shown below, SIST techniques based on more elaborate procedures than the shift-and-stack average possess an even higher capability to suppress noise.

Three techniques were tested for processing the signals obtained: average, median and alpha-trimmed median. The noise was a combination of uniform random and bursts. The signal was initially invisible in the unprocessed signals. The time-domain signals obtained by all techniques for the power spectrum of the signal somewhat resembled that of the applied impact, with median techniques providing better results than simple averaging (Cosma & Enescu, 1999).

Investigations were carried out at the Grimsel Test Site in Switzerland to compare known techniques with those of the invention. The rocks at the Grimsel Test Site (GTS) are Paleozoic granite and granodiorite that have been heavily deformed and altered during the Alpine orogeny. Consequently, the seismic transparency of the rock at GTS is very low, corresponding to a Q factor of 10 to 20. Earlier studies regarding the performance of various seismic sources suggested that a suitable combination of high frequency and high energy for mapping the site could be reached only by explosive sources. The fact that explosives are able to produce both high energy and frequency in a burst is because the high energy results from the high speed of the particles during the detonation rather than from the movement of a large mass. The low seismic transparency of the GTS rocks was overcome by using the SIST concept in accordance with the invention. Measurements were performed in a rock block positioned between two gently down-going boreholes, 120 m apart, 150 m and 190 deep (BOUS 85.003 and ADUS 96.001) and a tunnel WT, perpendicular to the boreholes. The measurements performed included tunnel-to-hole and crosshole measurements. The maximum source-receiver distance was around 200 m.

A first measuring campaign was carried out with single-pulse sources. 30-component accelerometers were clamped in one of the holes and the sources were fired in the other hole and in the tunnel. A piezo-electric and an electromechanical source, both single-pulse, were used. The conclusion from this campaign was that single-pulse sources are not suitable for high resolution surveys because, on one hand, increasing the source power to increase S/N ratio narrows the frequency band of the seismic pulse, and on the other hand, increasing the total energy by on-line stacking takes too long, for routine operations.

A first attempt at using standard construction site equipment to build e SIST source used a modified 1 kW electric hammer drill. A 20 - 80 Hz impact frequency band was generated by varying the input voltage. It is important to note that the amplitude of the pulse does not depend on the input voltage and it was found that the impact frequency varied linearly with the voltage. These characteristics make electromechanical sources computer-controllable, by adjusting the voltage as a function of time. Various impact frequency schemes can thus be generated.

Several models of surface and tunnel-wall electromechanical SIST sources have been tested. A typical hand-held 1.5 kW electric demolition hammer delivers 20 J per impact, at a mean impact rate of 25/second. The energy delivered in a 20s sweep is 10 kJ, which compares with a midsize dropweight. The signal frequency, though, goes well beyond 1 kHz, while a drop weight of comparable energy, used in similar conditions, remains in the law hundreds of Hz.

GTS tunnel-to-hole surveys carried out with a SIST source as shown in Figure 1, applied to the tunnel wall and an array of down-the-hole accelerometers in the boreholes, produced spectra in which frequencies above 1 kHz tend to be lost in steps, corresponding to zones of fractured and altered rock crossed by the seismic signal. However, frequencies of up to 2 kHz can be observed all the way to a depth of 110 m, which corresponds to a source-receiver distance of approximately 140 m. The frequency content at the receiver end was higher than obtained, with single-pulse sources. It was also higher than reported by earlier seismic investigation programmes carried out at the same site (Buhnemann, 1998).

Piezo-electric SIST sources (see Figure 1) for investigation depths up to 1 km and for borehole diameters from 46 to 100 mm were built based on an existing single-pulse piezo-electric impact generator (hammer) model PH52 from Vibrometric. The seismic signals are produced by applying controlled sequences of high voltage pulses to the stack of piezo-electric ceramic elements. The frequency band produced is 500 - 2500 Hz and could be adjusted. The source is clamped to the borehole wall by a motor-driven wedge mechanism (Figure 10), or by coupling of the source through the borehole fluid, as shown in Figure 6. This latter arrangement is preferred since the delays in operating the clamping mechanism otherwise severely limit the rate at which impact sequences can be performed, and discount the advantages of the invention.

The technique of the invention proved capable of characterizing a rock mass at the test site, providing a level of detail necessary for the construction of tomographic images, despite the fact that fracturing and extensive lamprofyre dikes brought the average Q (quality) factor of the rock as law as 10.

The proof of the ability of high-resolution seismic techniques to detect and characterize rock discontinuities was made by characterizing a rock block delimited by two parallel, gently dipping boreholes and a tunnel perpendicular to them.

The rockmass characterization included the determination of the 3-D positions and orientations of rock features by multi-offset VSP and crosshole imaging and the tomographic mapping of seismic velocities. The structural model was constructed by joint analysis of reflection and transmission data.

The main groups of reflectors were located and their existence and position confirmed in borehole and tunnel profiles. In spite of the low Q factor of the rock, the acquisition system including SIST sources provided the level of detail needed for tomography and migration, while data of acceptable quality could not be obtained with single-pulse sources.

An electro-hydraulic realization of a Swept Impact Apparatus is presented in Figures 12 to 14.

The following description is applicable to hydraulic percussion systems/hammers, hydraulic breakers, etc.

It is possible to adapt the electro-hydraulic control system, which is part of the invention described herein, to any, existent or that will be developed in future, constructive type of hydraulic breaker (with debit of 20 to 350 l/min and pressure of hydraulic of 20 to 200 bars, energy of 75 to 6000 J/impact).

Usually the hydraulic breaker may be mounted on an auto-tractor or excavator, weighting from app. 1.5 to 65 tons.

The hydraulic system of controlled variation of the impact frequency of a hydraulic breaker (usually in the range n ... n/3, with n = maximum number of impacts / minute) was developed based on a hydraulic regulator with 3 paths 800, with the following components (see Figure 12).

1. a feeding circuit from a hydraulic station (usually the one on the auto-tractor/excavator). This will be mounted on the hydraulic pipe on the arm of the excavator 800, at it's tip. This circuit 601 will use the entire debit generated by the hydraulic station. It comprises the portion between feeding station 700 and the electro-hydraulic system for debit variation 600.
2. a circuit for feeding the hydraulic breaker 602. This circuit connects the system for variation of the impact frequency and feeding outlet of the breaker. The command debit, which attains the variation of the impact rate, flows through this circuit.
3. a return circuit 603. This circuit collects the oil debit used by the breaker and the oil debit from the electro-hydraulic system 600, which represents the difference between the flow from the hydraulic station (any mechanic-hydraulic system with a hydraulic station and an execution element, with rotary, linear or alternative movement) 700 and the flow used by the breaker (execution element) 800. The return circuit uses the return pipe from the arm of the auto-tractor/excavator, which is connected simulta-

neously to the return outlet of the breaker and the evacuation outlet of the extra debit of the electro-hydraulic system, through the linkage 604.

The hydraulic scheme of the electro-hydraulic system for debit control is presented in Figure 13.

The system consists of a metallic prop on which the hydraulic block is mounted with two hydraulic aparata. Three hoses leave from the hydraulic block, towards the arm of the auto-tractor. The lead-ins were made to facilitate an easy connection onto the hydraulic system of the tractor. The system consists of an electro-hydraulic element with balanced piloting which auto-controls its debit in accordance with the command from the electronic control and a specially designed hydraulic vent, which maintains a constant programmed debit, regardless of the load on the output circuit. The pressure fall on the debit control system was designed for 20 bars, regardless on the debit flow and verified by experimental measurements.

The block diagram of the electro-hydraulic system 600 is presented in Figure 14.

The component elements of the electro-hydraulic block are:

1. Regulator vent 611 (an original design for this particular application): has the role of maintaining a constant fall of pressure on the proportional distributor. The vent handles the extra flow and ensures the maintenance of a constant flow regardless of the load.
2. The proportional distributor with four routs 612 (DN 20, Q = 140 l/min, p = 170 bar – Manesmann Rexroth) has one of the output routes blocked. On this is mounted the pilot of the proportional distributor, controlled by a vol- tage-current convertor.
3. The distribution plate 613.

The system provides the “automatic digression” through the regulator vent of the “extra flow” (PC controlled) into the hydraulic network.

An Electromagnetic Device using the Swept Impact Seismic Technique to generate impacts in boreholes is presented in Figure 15.

The fourth application of the Swept Impact Seismic Technique (SIST) has been developed for use in boreholes, based on two types of linear electromagnets.

a) Alternative Current electromagnets (110V / 60 Hz or 220V / 50 Hz)
b) Continuous Current electromagnets actuated at 27 - 48V

An example of the main technical characteristics of the electromagnetic SIST devices is given below:

Input Voltage:	110V / 60 Hz or 220V / 50 Hz or 27 - 48V CC
Power rating:	650W (1500W)
Diameter:	54 mm (66mm)
Length of electromagnet:	650 mm (910 mm)
Energy/impact:	10-12 J (20-23 J)
Impact rate	5/s - 15/s (10/s - 3/s)

The controller unit for the electromagnetically actuated impact source is similar to the one used for the electromechanical, piezoelectric and hydraulic devices.

Figure 15 shows schematically the electromagnetic apparatus. The electromagnet 910 comprises a reciprocating tube-shaped axle 911 made out of ferromagnetic steel with a magnetic permeability of 2000 or less, which is rigidly fitted around a composite carbide core 912. The housing of the electromagnet 913 is fitted within the outer casing of the device 901, which is made out of nonmagnetic steel. The solenoid 914 produces a toroidal magnetic field. The axle 911 strikes the anvil 921, which is coupled elastically with respect to the housing 901 through the elastic assembly 920, comprising rubber springs 922. The anvil 921 actuates the axial-radial converter 930 through the flange 923, thus producing a pressure pulse in the borehole fluid. The converter rests on the loading block 902, which acts as an inertial mass. In a variation of the design the axial-radial converter 930 is replaced by a locking mechanism (not shown), which locks the device to the borehole wall. The electromagnet 910 is coupled elastically to the casing 901 by the elastic block 903. The device is powered through the cable 904 and connector 905.

CLAIMS

1. A method of seismic investigation using the Swept Impact Seismic Technique in which method the investigation is performed by means of a series of controlled impact sequences applied at different points of the investigation site, the impacts being generated with an impact device (20, 30, 40), and the operation of the impact device being controlled with a control system (110, 70) by means of an electric control signal.

2. A method according to claim 1, **characterized** in that the control system controls the impact device to produce a series of impacts, the impacts of the series having a repetition frequency swept between a low and a high frequency.

3. A method according to claim 2, **characterized** in that the high frequency has a ratio of at least 1. 5 to 1 with respect to the low frequency.

4. A method according to claim 1 **characterized** in that the method comprises following steps:
- measuring the response of the impact device to the control signal, and
- controlling the impact sequences on the basis of the measured response.

5. Method according to claim 4, **characterized** in that the response is measured essentially adjacent to the impact device.

6. A method according to claim 1 **characterized** in that the method comprises following steps:
- measuring the response to the impacts of a site to be investigated, and
- controlling the impact sequences on the basis of the measured response.

7. Method according to claim 6, **characterized** in that it further comprises receiving, recording and decoding seismic signals produced by the impacts and transmitted through the material of the site, and processing the received signals.

8. Method according to claim 7, **characterized** in that the signals are combined by summation and/or by a median technique and that the signal processing comprises filtering and/or shaping means permitting the amplitude of the impact

signals to be adjusted before to the application of the summation and/or the median technique in order to reduce noise.

9. Method according to claim 1, wherein the impacts are generated by an impact generator arranged in a borehole.

10. Method according to claim 1 for seismic investigations in boreholes, **characterized** in that the impact device is coupled to the borehole by liquid in the latter or coupled directly to the borehole wall by means of a clamping mechanism.

11. Method according to claim 1, **characterized** in that the control system controls several impact systems working simultaneously or alternatively.

12. Method according to claim 1 for seismic investigations, **characterized** in that the system is used in applications, including: seismic reflection and refraction, shear and surface wave studies, VSP (Vertical Seismic Profiling) and crosshole measurements and also research and education.

13. Method according to claim 1 for seismic investigations, **characterized** in that the system is used on ground surface, above or under water, on the wall of a tunnel or of a constructed structure, or within a borehole.

14. Apparatus of seismic investigation using the Swept Impact Seismic Technique in which method the investigation is performed by means of a series of controlled impact sequences applied at different points of the site, the impacts being generated with an impact device (20, 30, 40) and the operation of the impact device being controlled with a control apparatus (110, 70), **characterized** in that the control comprises:
- means (50, 60) for measuring the response of the impacts of a site to be investigated,
- means (F) for connecting the measured response to the control system, and
- means in the control system for controlling the operation of the impact device on the basis of the measured response.

15. Apparatus according to claim 13, **characterized** in that the control apparatus is electro-mechanical, electro-hydraulical, electro-magnetical or electro-pneumatical.

16. Apparatus according to claim 13, **characterized** in that it may utilize standard readily available construction type equipment, e.g. mechanical rock-breaker or hydraulical rock breaker, etc.

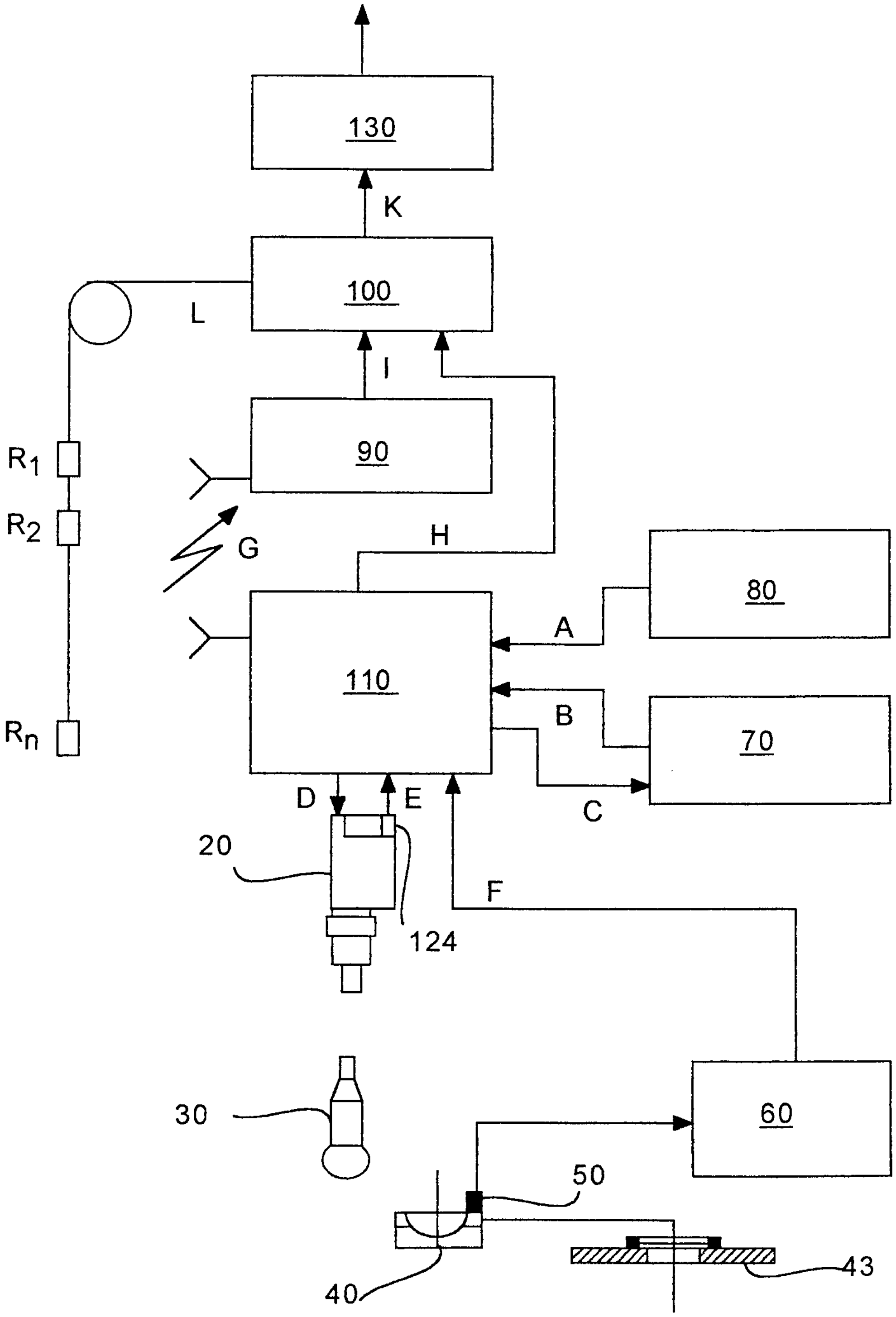

FIG. 1

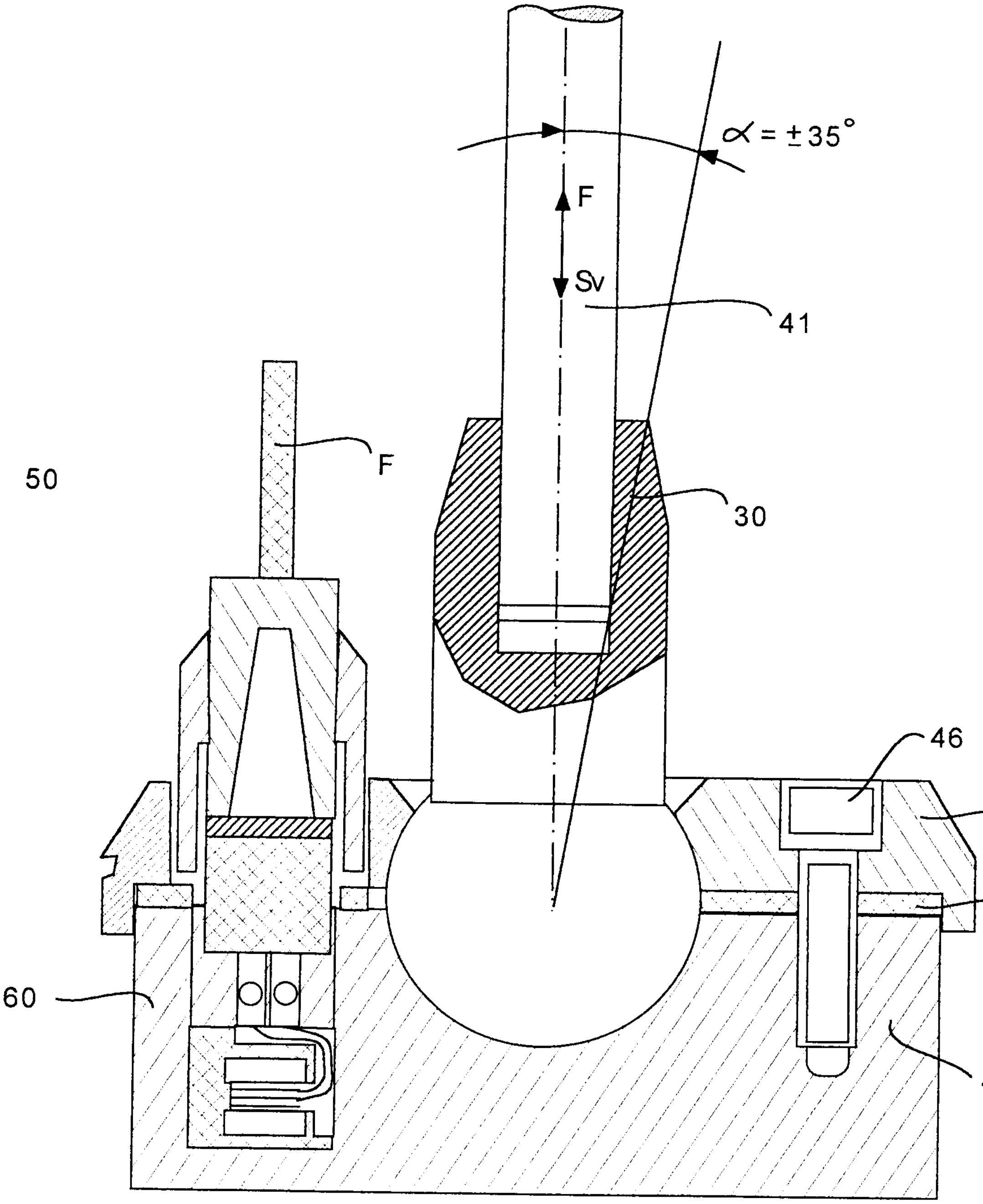

FIG. 2

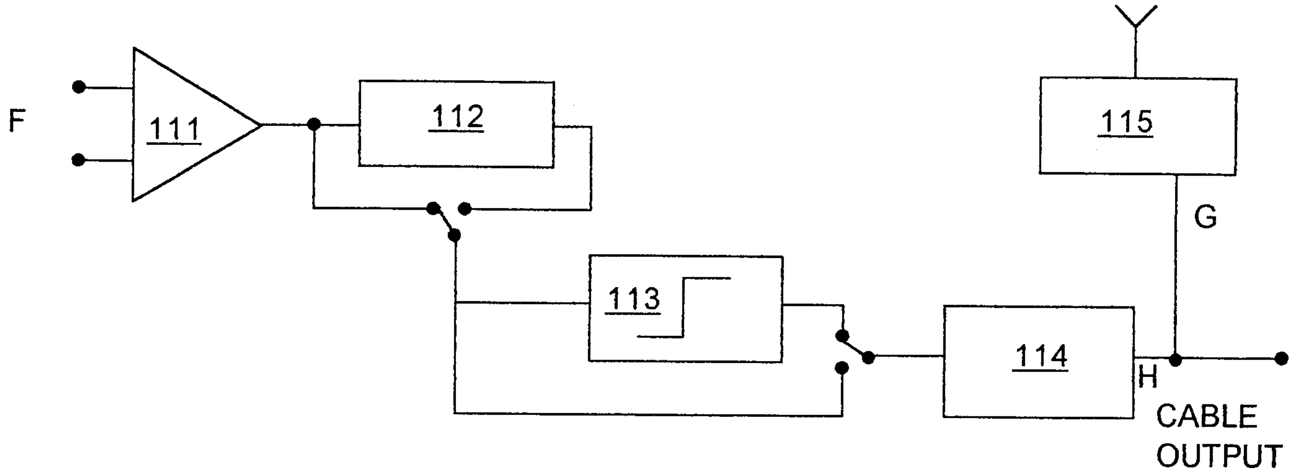
F
111
112
113
114
115
G
H
CABLE OUTPUT

FIG. 3

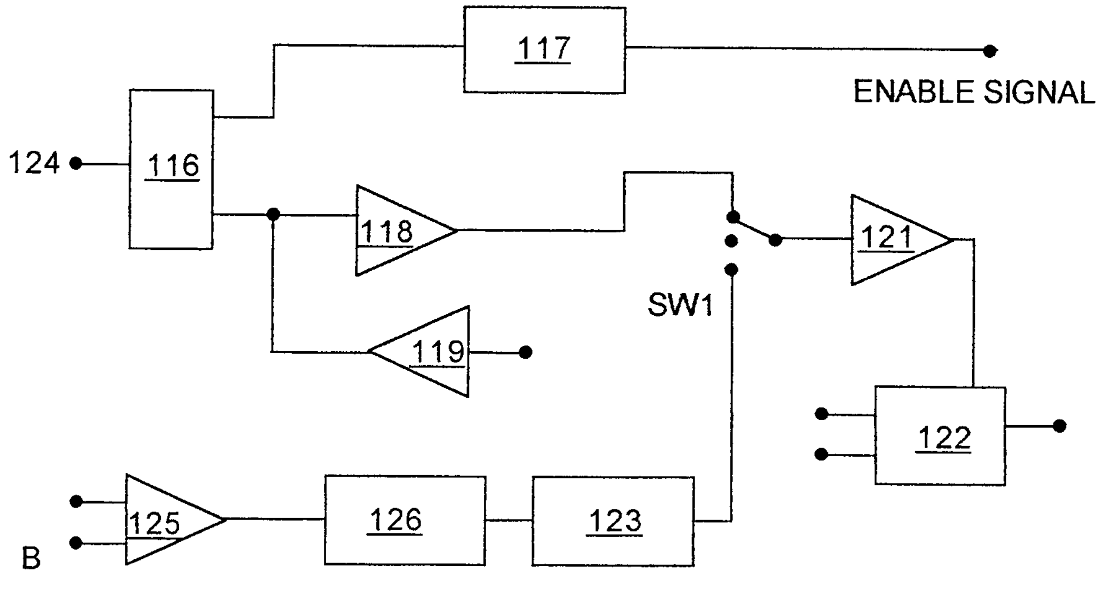
117
ENABLE SIGNAL
124
116
118
119
121
SW1
122
125
126
123
B

FIG. 4

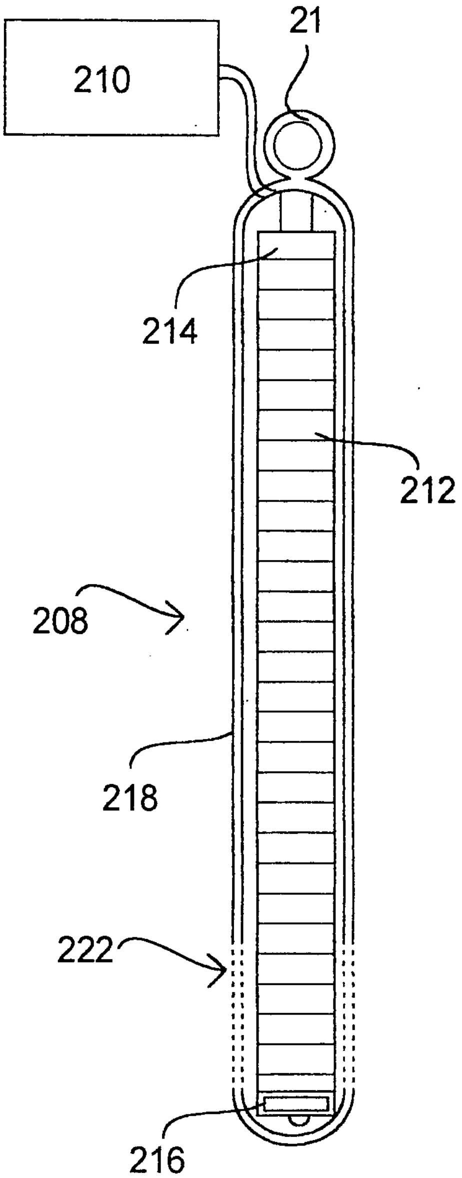

FIG. 5

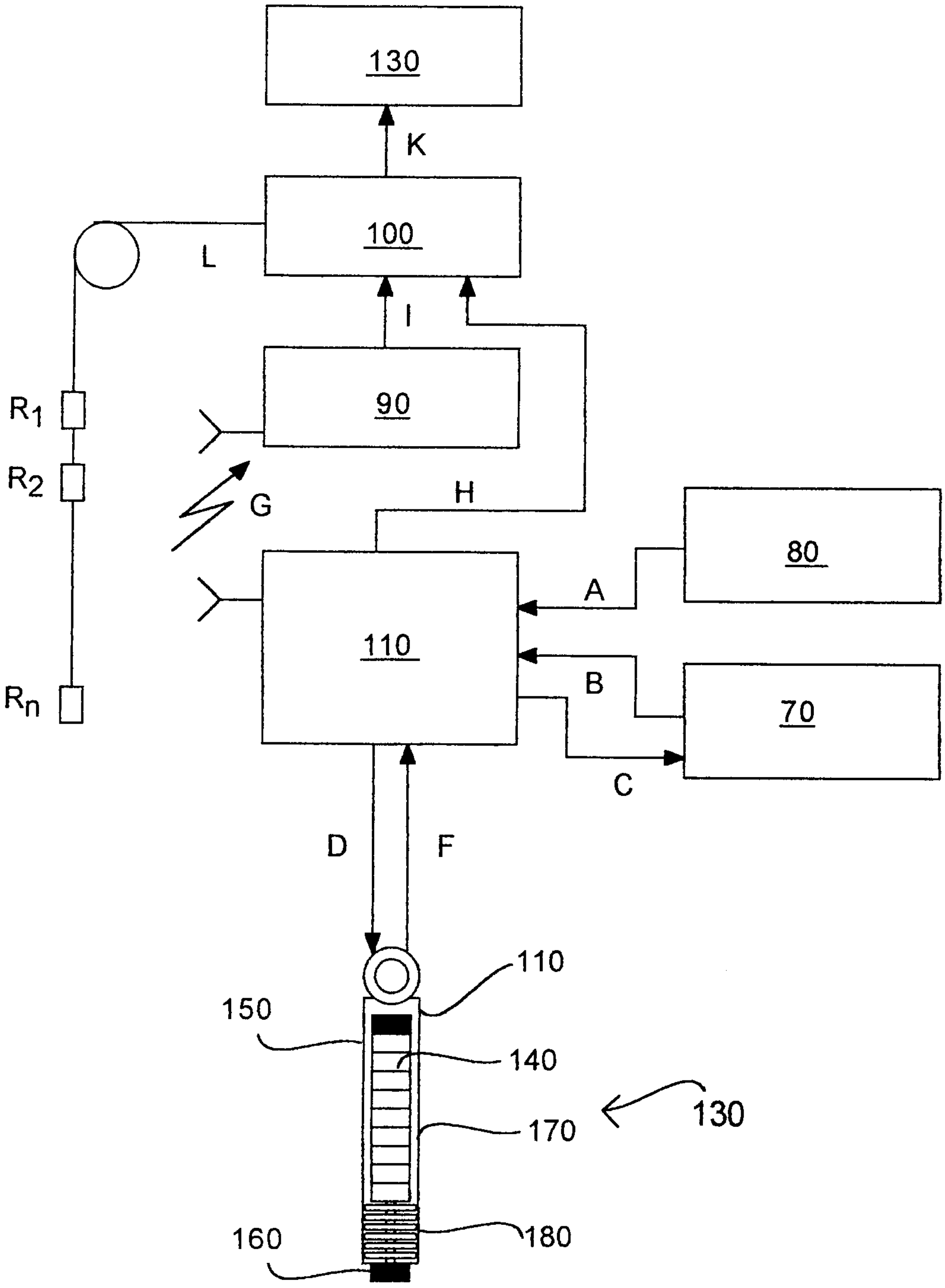
130
K
100
L
I
90
R1
R2
Rn
G
H
80
A
110
B
70
C
D
F
110
150
140
170
130
160
180

FIG. 6

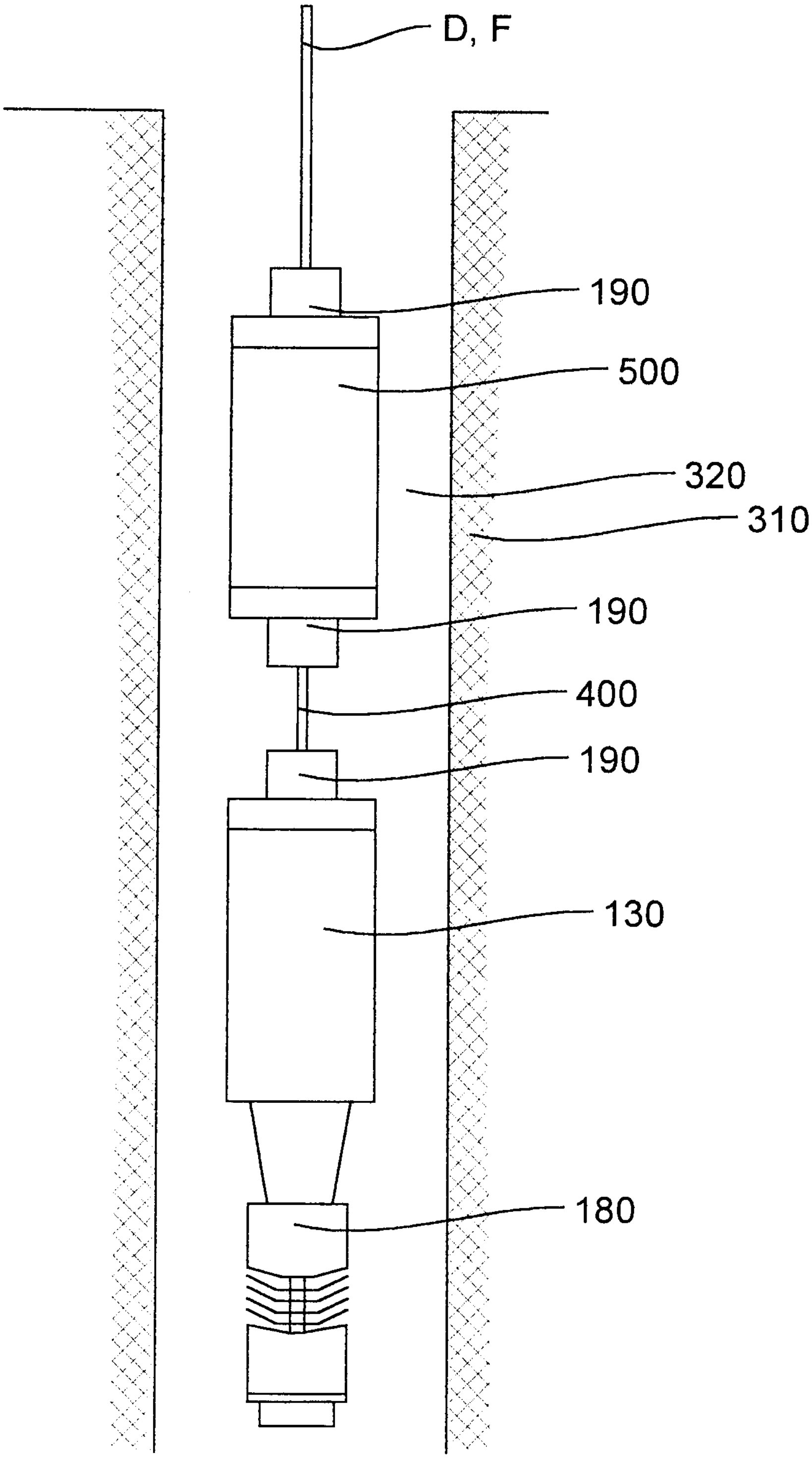

FIG. 7

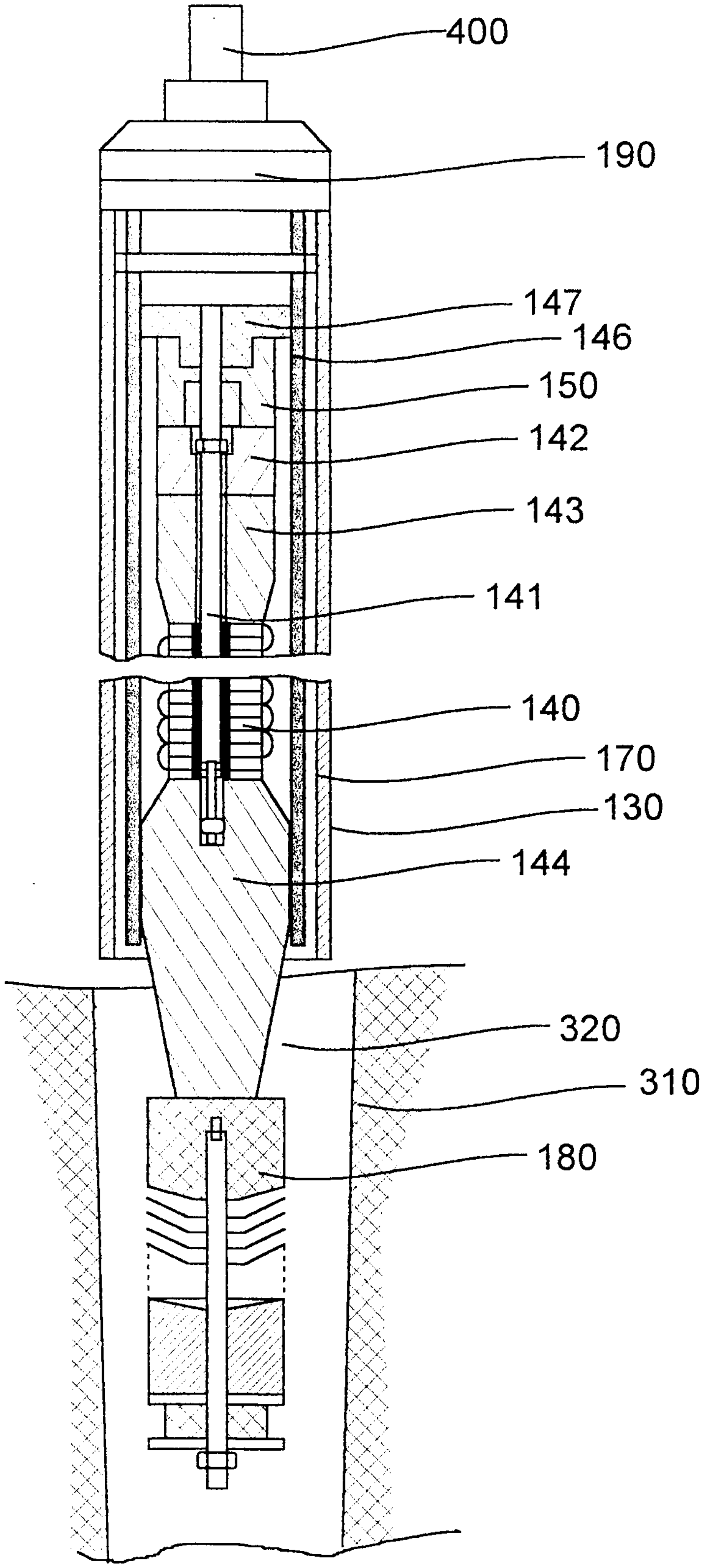

FIG. 8

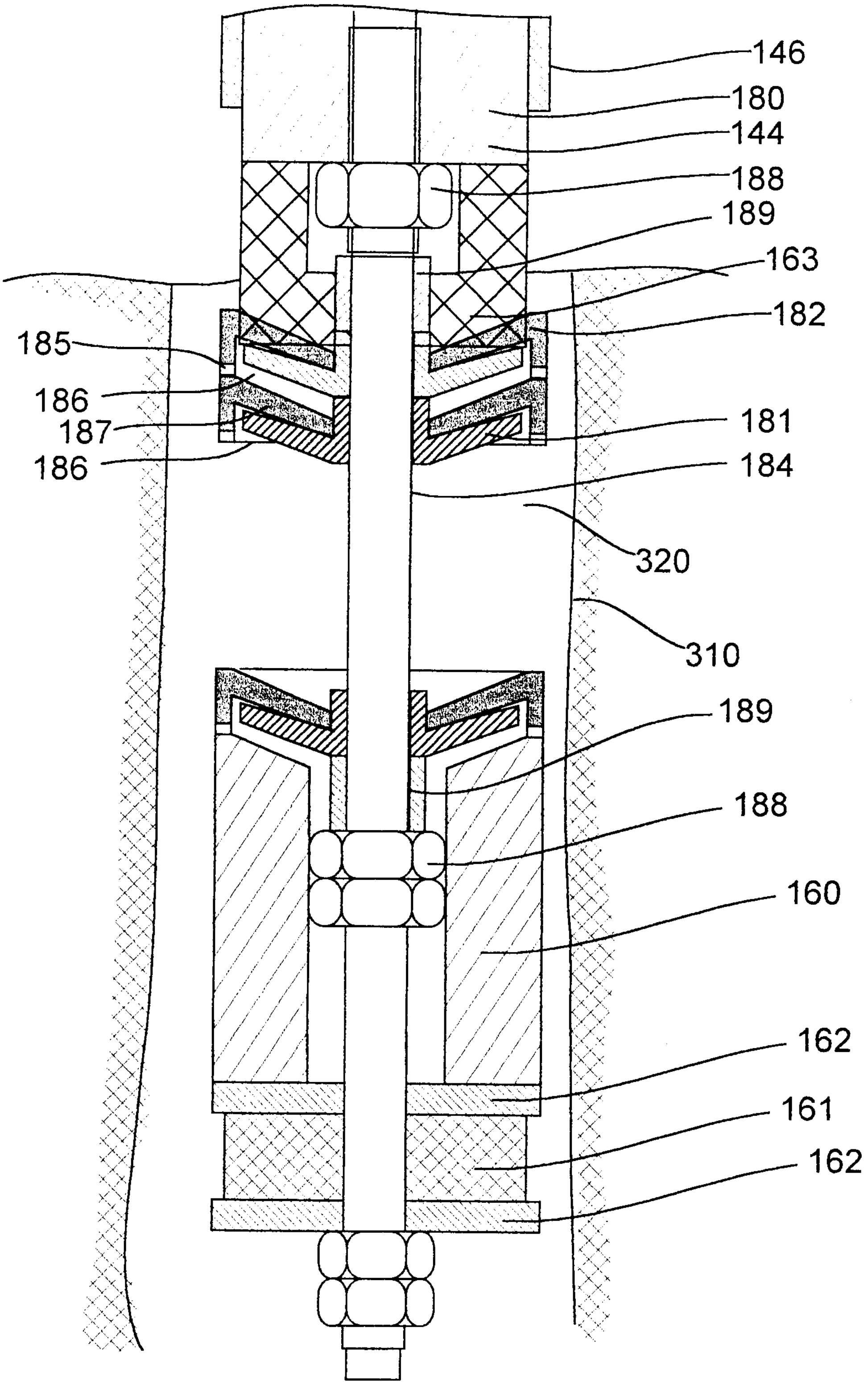
146
180
144
188
189
163
182
185
186
187
186
181
184
320
310
189
188
160
162
161
162

FIG. 9

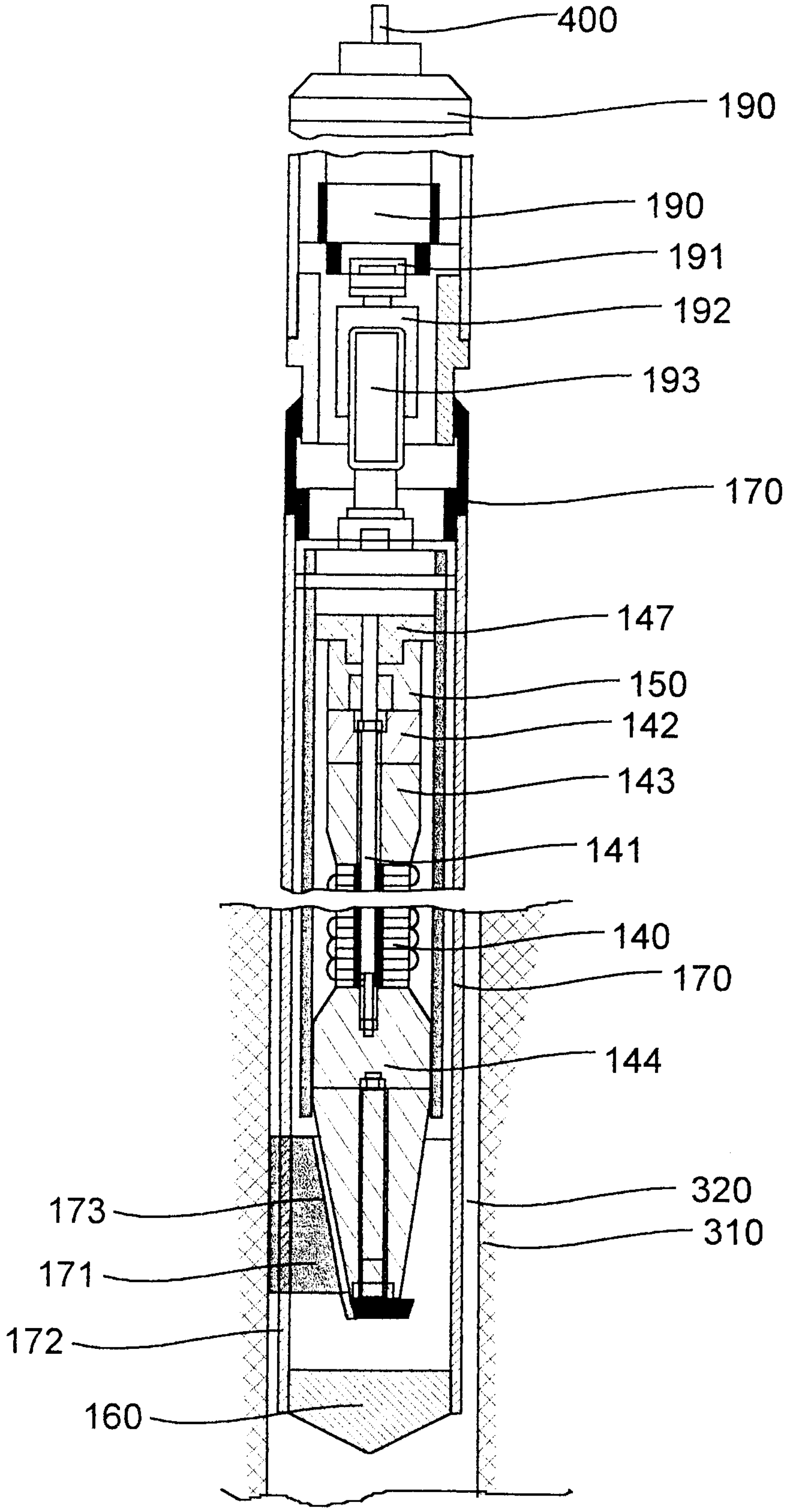
400
190
190
191
192
193
170
147
150
142
143
141
140
170
144
320
310
173
171
172
160

FIG. 10

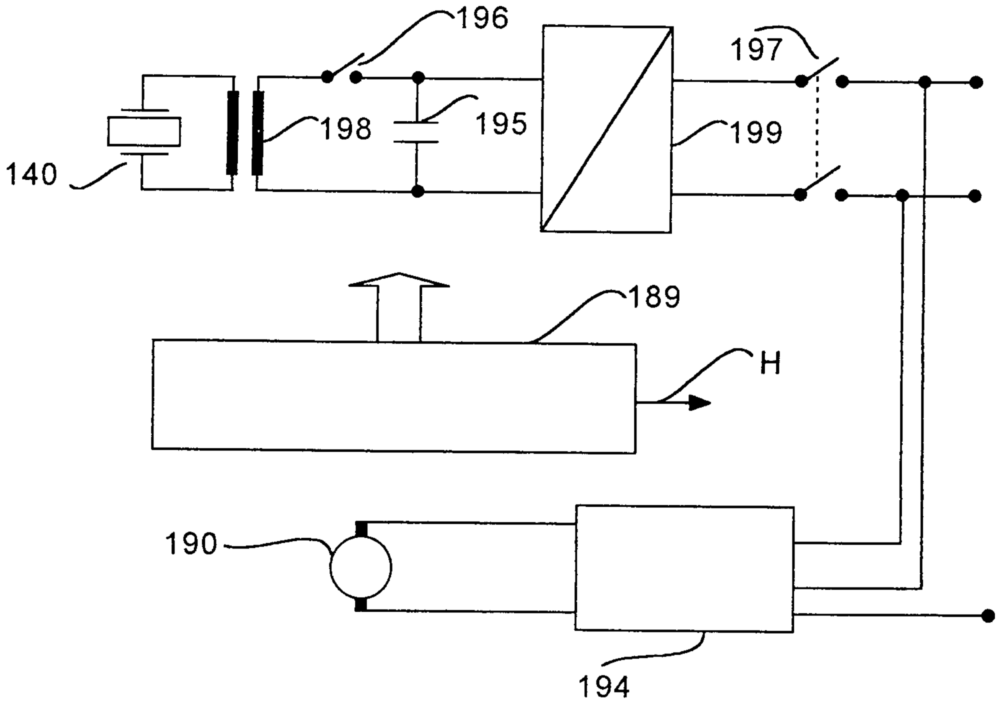

FIG. 11

THE HYDRAULIC SCHEME OF THE SYSTEM FOR DEBIT VARIATION

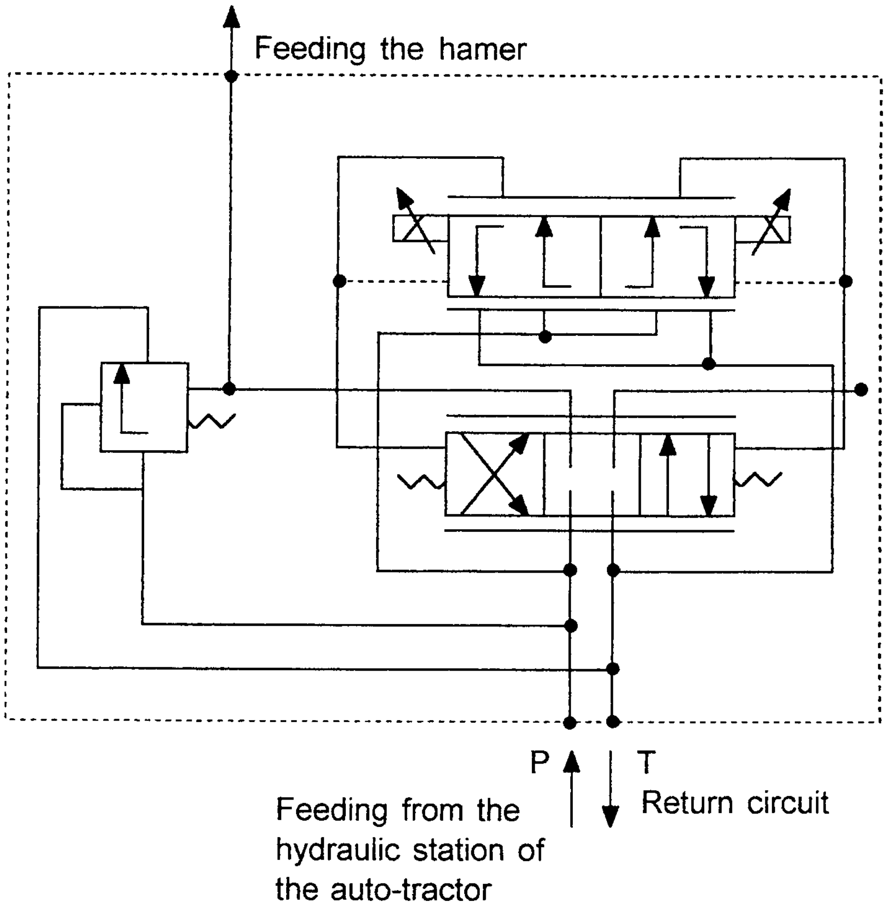

FIG. 13

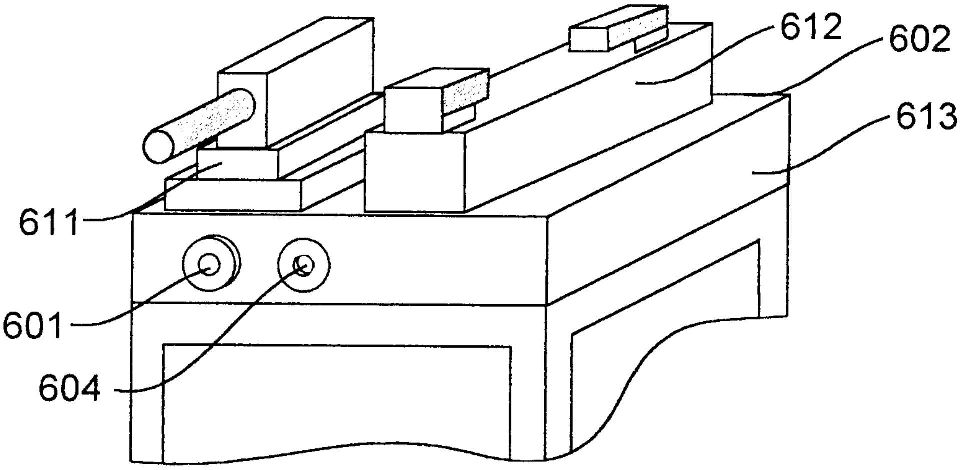
612
602
613
611
601
604

FIG. 14

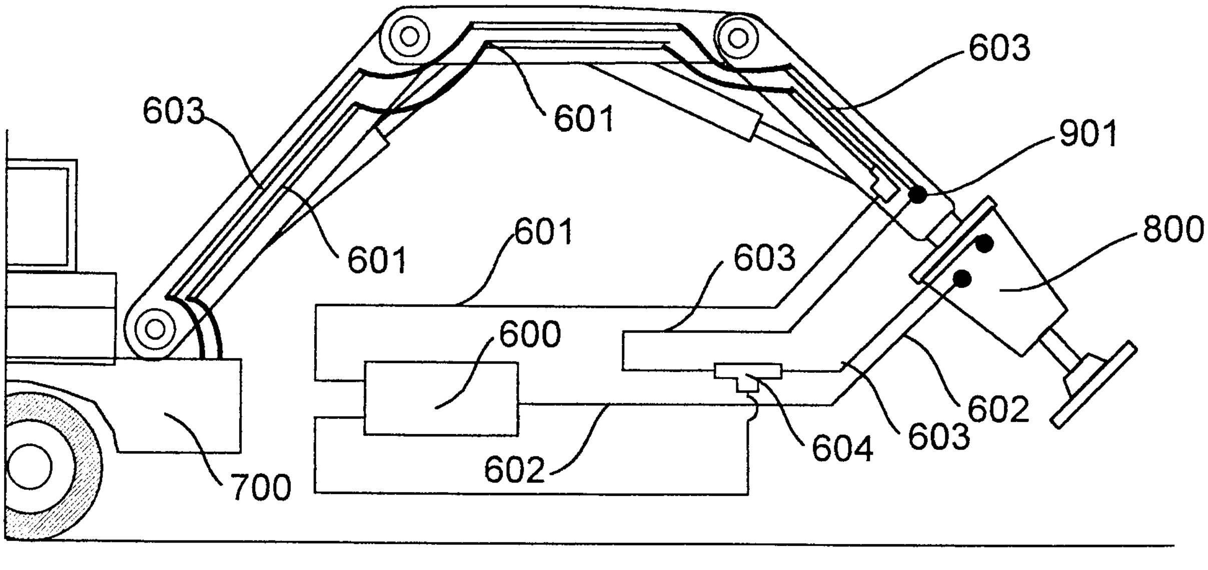
603
601
901
603
800
601
601
603
600
602
604
603
602
700

FIG. 12

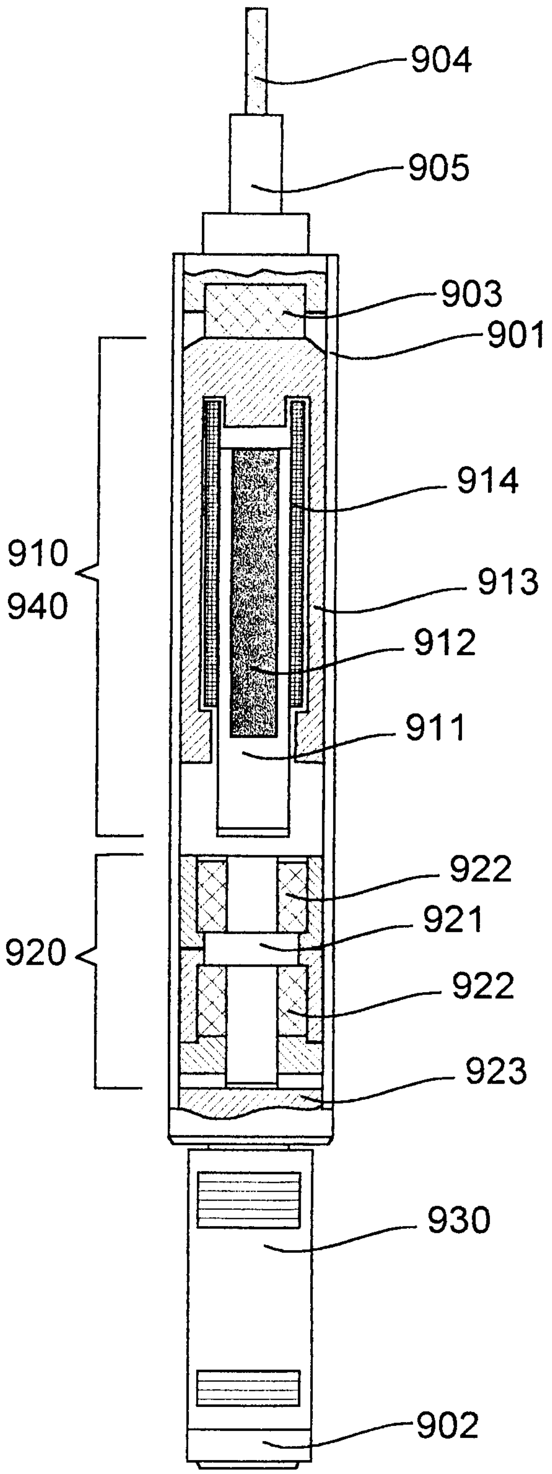
904
905
903
901
914
910
940
913
912
911
922
921
920
922
923
930
902

FIG. 15

INTERNATIONAL SEARCH REPORT

International application No.
PCT/FI 01/00214

A. CLASSIFICATION OF SUBJECT MATTER

IPC7: G01V 1/02, G01V 1/30, G01V 1/37
According to International Patent Classification (IPC) or to both national classification and IPC

B. FIELDS SEARCHED

Minimum documentation searched (classification system followed by classification symbols)

IPC7: G01V

Documentation searched other than minimum documentation to the extent that such documents are included in the fields searched

SE,DK,FI,NO classes as above

Electronic data base consulted during the international search (name of data base and, where practicable, search terms used)

C. DOCUMENTS CONSIDERED TO BE RELEVANT

Category*	Citation of document, with indication, where appropriate, of the relevant passages	Relevant to claim No.
Y	WO 8705708 A1 (CHEVRON RESEARCH COMPANY), 24 Sept 1987 (24.09.87), page 7, line 1 - line 11; page 8, line 1 - line 40; page 11, line 5 - line 9, figures 1,2,4 --	1-16
Y	DE 4130695 A1 (BERGWERKSVERBAND GMBH), 25 March 1993 (25.03.93), column 3, line 42 - line 68; column 4, line 7 - line 17, figure 1 --	1,4-9,11-16
Y	GEOPHYSICS, Volume 61, No 6, 1996, CHOON BYONG PARK ET AL, "Swept impact seismic technique (SIST)", see the whole document --	1,14

☒ Further documents are listed in the continuation of Box C. ☒ See patent family annex.

* Special categories of cited documents:

"A" document defining the general state of the art which is not considered to be of particular relevance

"E" earlier application or patent but published on or after the international filing date

"L" document which may throw doubts on priority claim(s) or which is cited to establish the publication date of another citation or other special reason (as specified)

"O" document referring to an oral disclosure, use, exhibition or other means

"P" document published prior to the international filing date but later than the priority date claimed

"T" later document published after the international filing date or priority date and not in conflict with the application but cited to understand the principle or theory underlying the invention

"X" document of particular relevance: the claimed invention cannot be considered novel or cannot be considered to involve an inventive step when the document is taken alone

"Y" document of particular relevance: the claimed invention cannot be considered to involve an inventive step when the document is combined with one or more other such documents, such combination being obvious to a person skilled in the art

"&" document member of the same patent family

Date of the actual completion of the international search 25 June 2001	Date of mailing of the international search report 27 -06- 2001
Name and mailing address of the ISA/ Swedish Patent Office Box 5055, S-102 42 STOCKHOLM Facsimile No. +46 8 666 02 86	Authorized officer ENDER DAG/EE Telephone No. +46 8 782 25 00

INTERNATIONAL SEARCH REPORT

International application No.
PCT/FI 01/00214

C (Continuation). DOCUMENTS CONSIDERED TO BE RELEVANT

Category*	Citation of document, with indication, where appropriate, of the relevant passages	Relevant to claim No.
A	WO 8401834 A1 (GEOTEK OY), 10 May 1984 (10.05.84), see the whole document --	1-16
A	US 4655314 A (TOM P. AIRHART), 7 April 1987 (07.04.87), see the whole document --	1-8,11-16
A	US 4569412 A (JOHN V. BOUYOUCOS ET AL), 11 February 1986 (11.02.86), see the whole document -- --------	1-16

INTERNATIONAL SEARCH REPORT

Information on patent family members

28/05/01

International application No.

PCT/FI 01/00214

Patent document cited in search report	Publication date	Patent family member(s)	Publication date
WO 8705708 A1	24/09/87	AU 606593 B	14/02/91
		AU 7205687 A	09/10/87
		BR 8706213 A	23/02/88
		CA 1328685 A	19/04/94
		CN 1011920 B	06/03/91
		CN 1022139 B	15/09/93
		CN 1053297 A	24/07/91
		CN 87101987 A	07/10/87
		DE 3775155 A	23/01/92
		EP 0263149 A,B	13/04/88
		NO 179118 B,C	29/04/96
		NO 874609 D	00/00/00
		US 4702343 A	27/10/87
		US 4783771 A	08/11/88
		US 4805725 A	21/02/89
DE 4130695 A1	25/03/93	NONE	
WO 8401834 A1	10/05/84	AU 2206883 A	22/05/84
		BR 8307708 A	19/03/85
		CA 1211551 A	16/09/86
		DE 3390274 T	11/07/85
		DK 336384 A	09/07/84
		FI 823803 A	09/05/84
		GB 2147700 A,B	15/05/85
		GB 8430281 D	00/00/00
		NO 842724 A	05/07/84
		SE 440959 B,C	26/08/85
		SE 8406228 A	07/12/84
		FI 834052 A	05/05/85
US 4655314 A	07/04/87	DE 3704626 A	20/08/87
		FR 2594559 A,B	21/08/87
		GB 2186689 A,B	19/08/87
		GB 8702502 D	00/00/00
US 4569412 A	11/02/86	NONE	