US 20100195263A1

(19) **United States**
(12) **Patent Application Publication**
Sweeney et al.
(10) **Pub. No.: US 2010/0195263 A1**
(43) **Pub. Date: Aug. 5, 2010**

(54) CAPACITORS USING CARBON-BASED EXTENSIONS

(75) Inventors: **Daniel C. Sweeney**, Burbank, CA (US); **John B. Read**, San Diego, CA (US)

Correspondence Address:
TOWNSEND AND TOWNSEND AND CREW, LLP
TWO EMBARCADERO CENTER, EIGHTH FLOOR
SAN FRANCISCO, CA 94111-3834 (US)

(73) Assignee: **Space Charge, LLC**, Aspen, CO (US)

(21) Appl. No.: **12/698,883**

(22) Filed: **Feb. 2, 2010**

Related U.S. Application Data

(60) Provisional application No. 61/206,677, filed on Feb. 2, 2009, provisional application No. 61/223,688, filed on Jul. 7, 2009, provisional application No. 61/254,903, filed on Oct. 26, 2009.

Publication Classification

(51) **Int. Cl.**
H01G 4/06 (2006.01)
H01G 4/00 (2006.01)
H01G 7/00 (2006.01)

(52) **U.S. Cl.** **361/321.1**; 361/301.1; 361/311; 29/25.42; 977/750; 977/932

(57) ABSTRACT

Devices for storing energy at a high density are described. The devices include carbon-containing extensions which increase the surface area between a dielectric material and one or both of the electrodes. The dielectric material may have a high dielectric constant (high permittivity) and a high breakdown voltage, allowing a high voltage difference between paired electrodes to effect a high stored energy density.

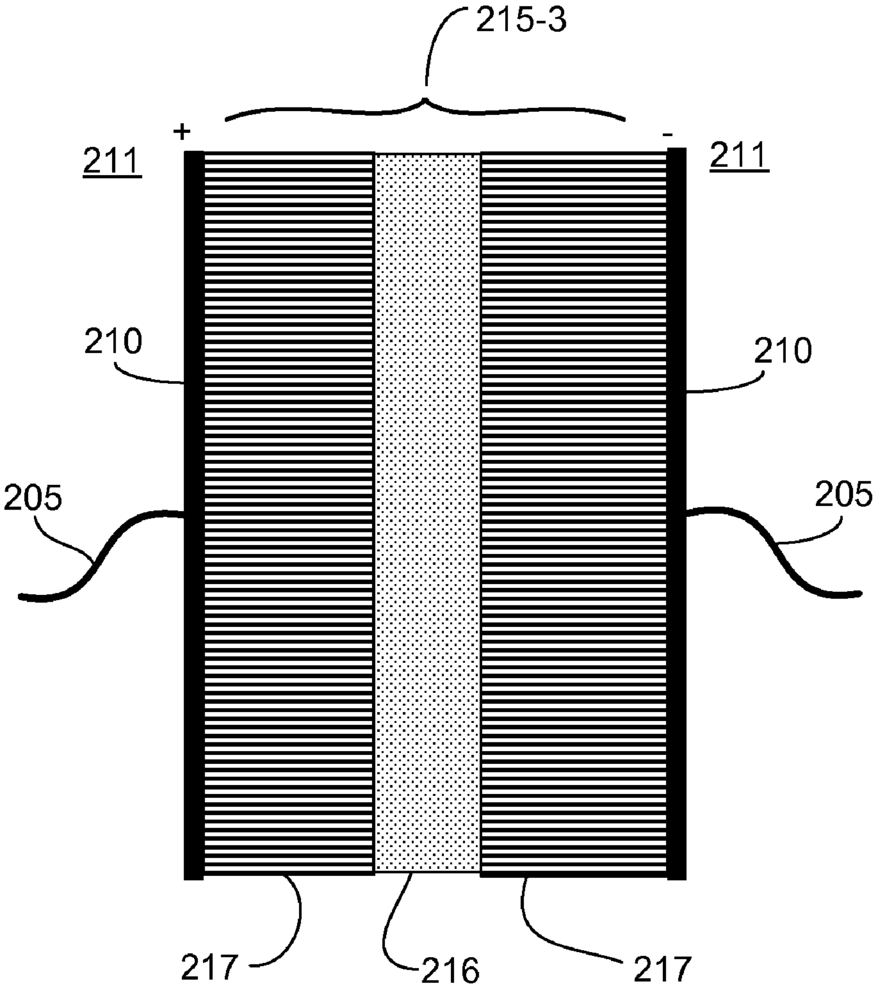

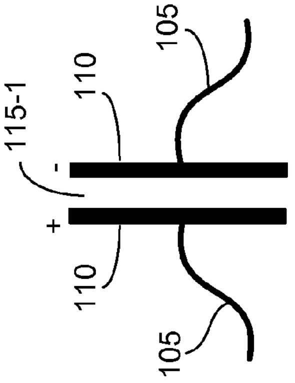

FIG. 1A
(Prior Art)

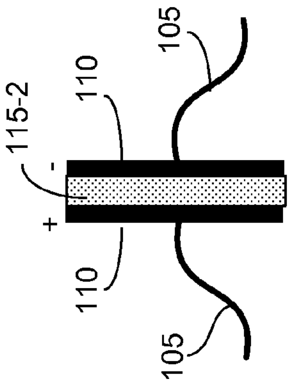

FIG. 1B
(Prior Art)

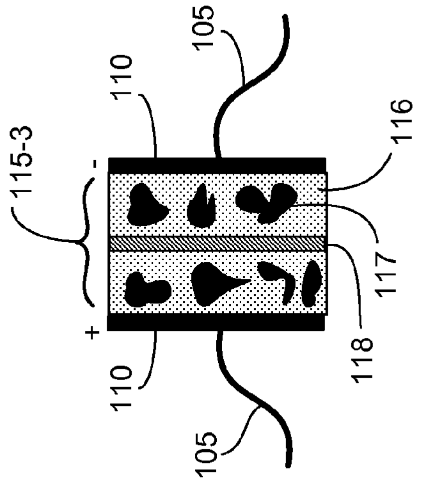

FIG. 1C
(Prior Art)

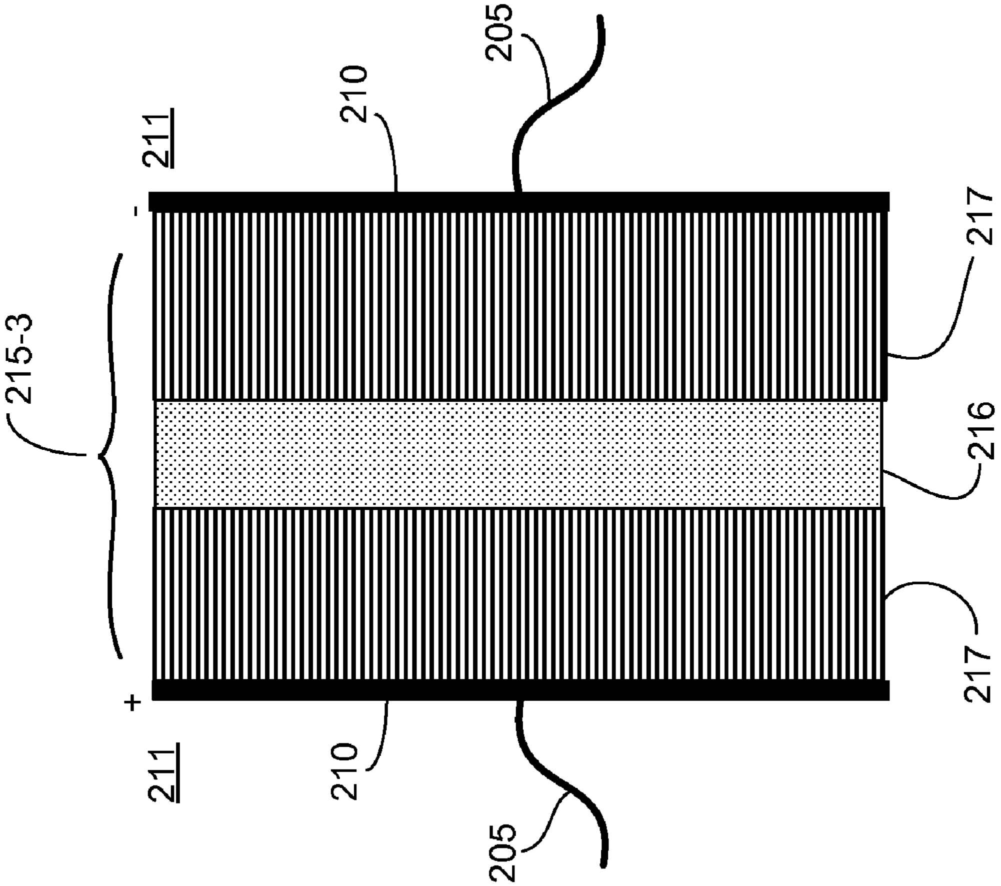

FIG. 2

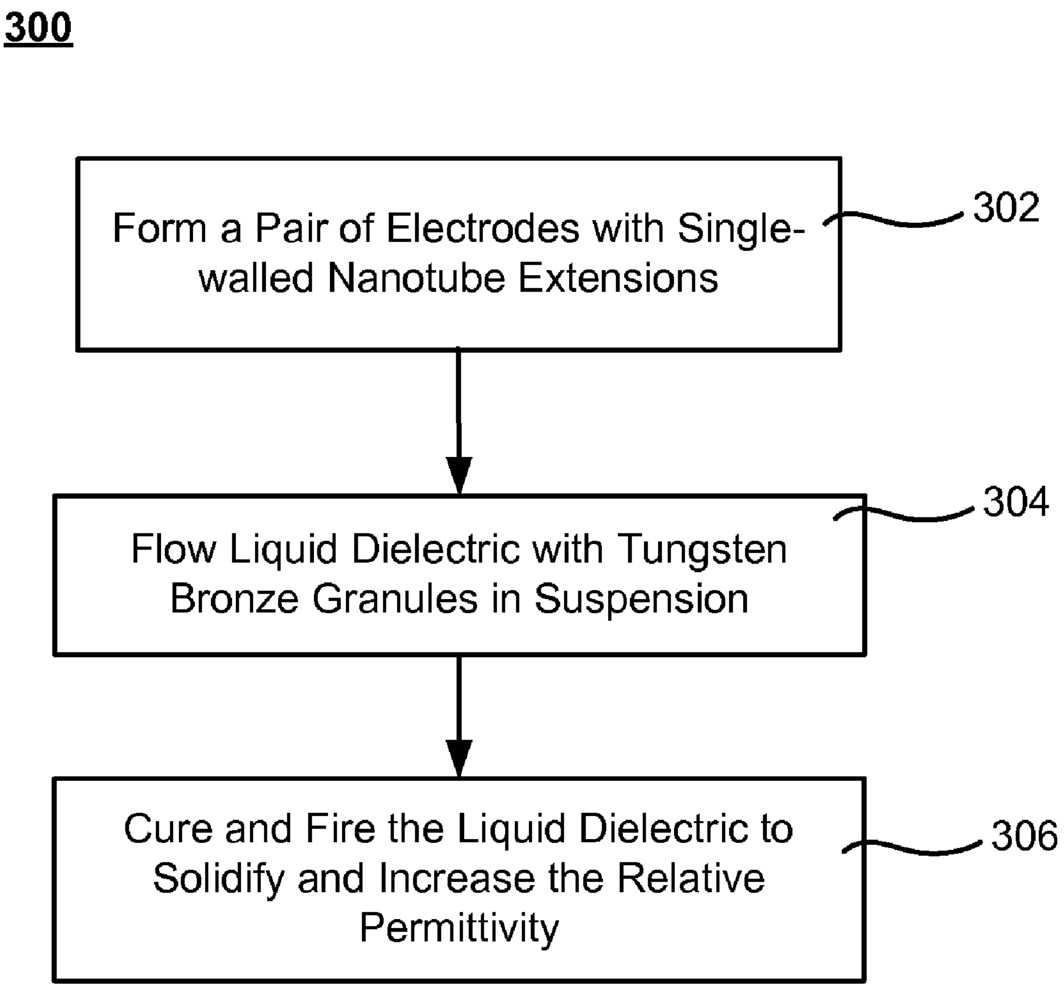
300
Form a Pair of Electrodes with Single-walled Nanotube Extensions
302
Flow Liquid Dielectric with Tungsten Bronze Granules in Suspension
304
Cure and Fire the Liquid Dielectric to Solidify and Increase the Relative Permittivity
306

FIG. 3

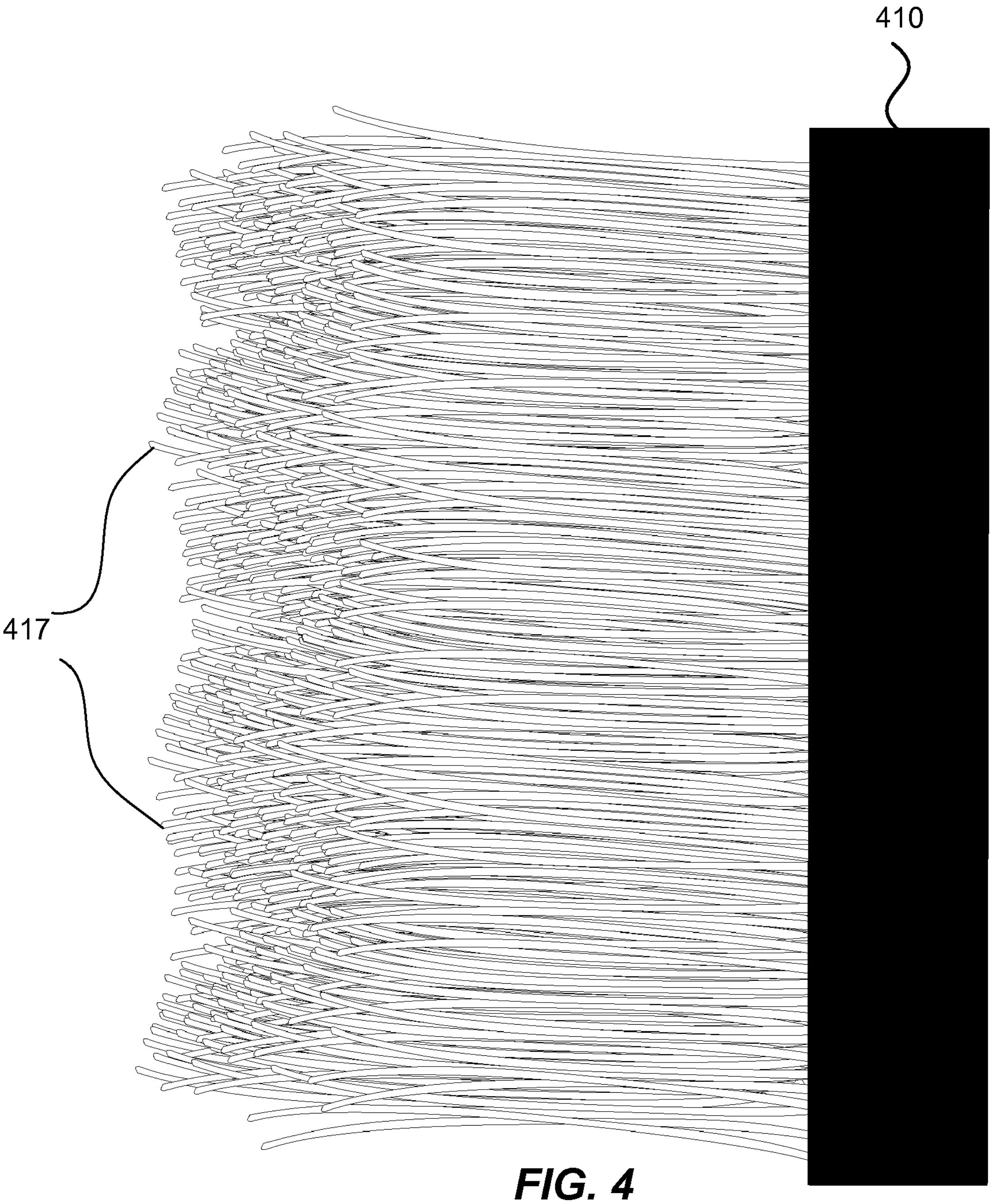

FIG. 4

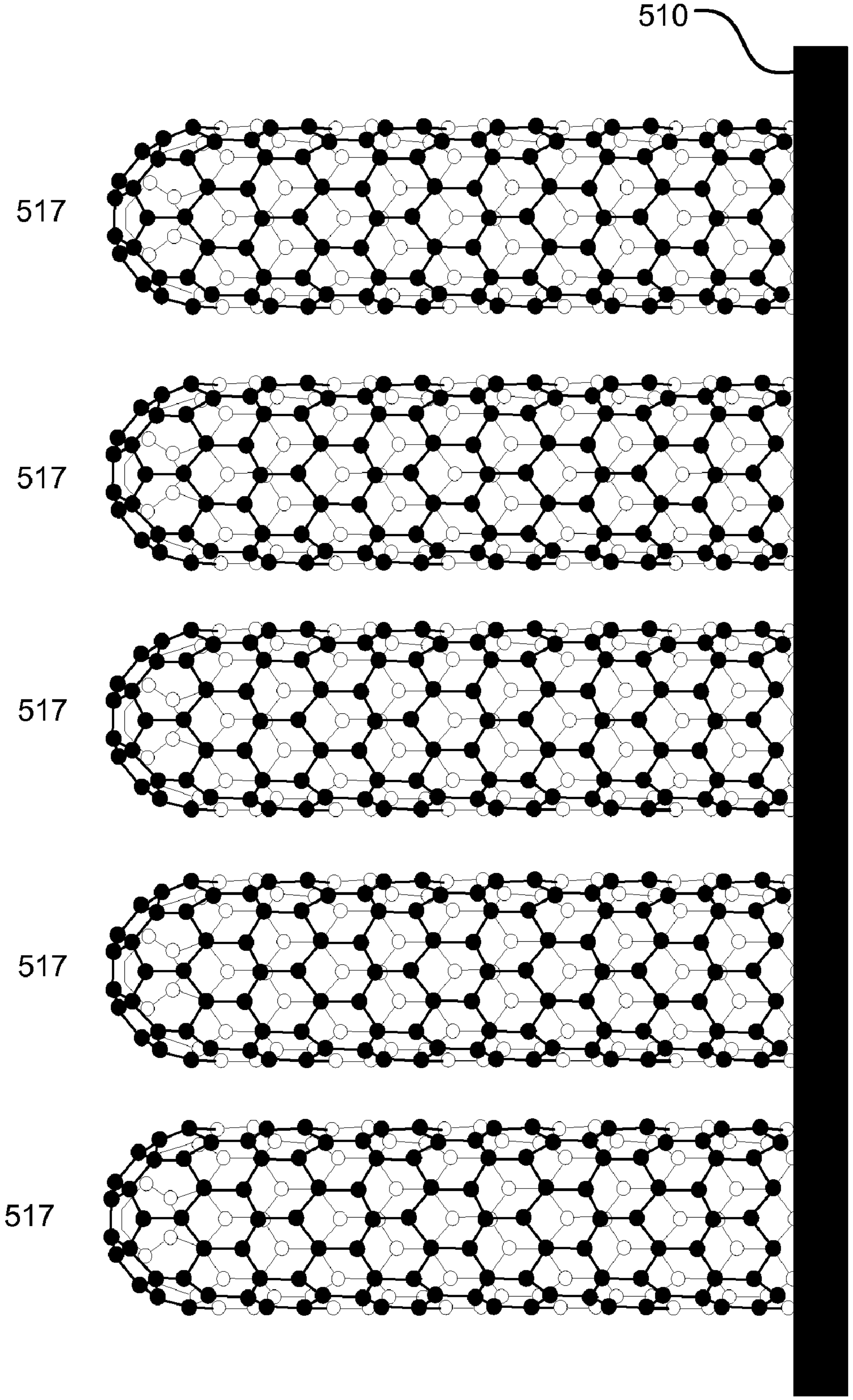

FIG. 5

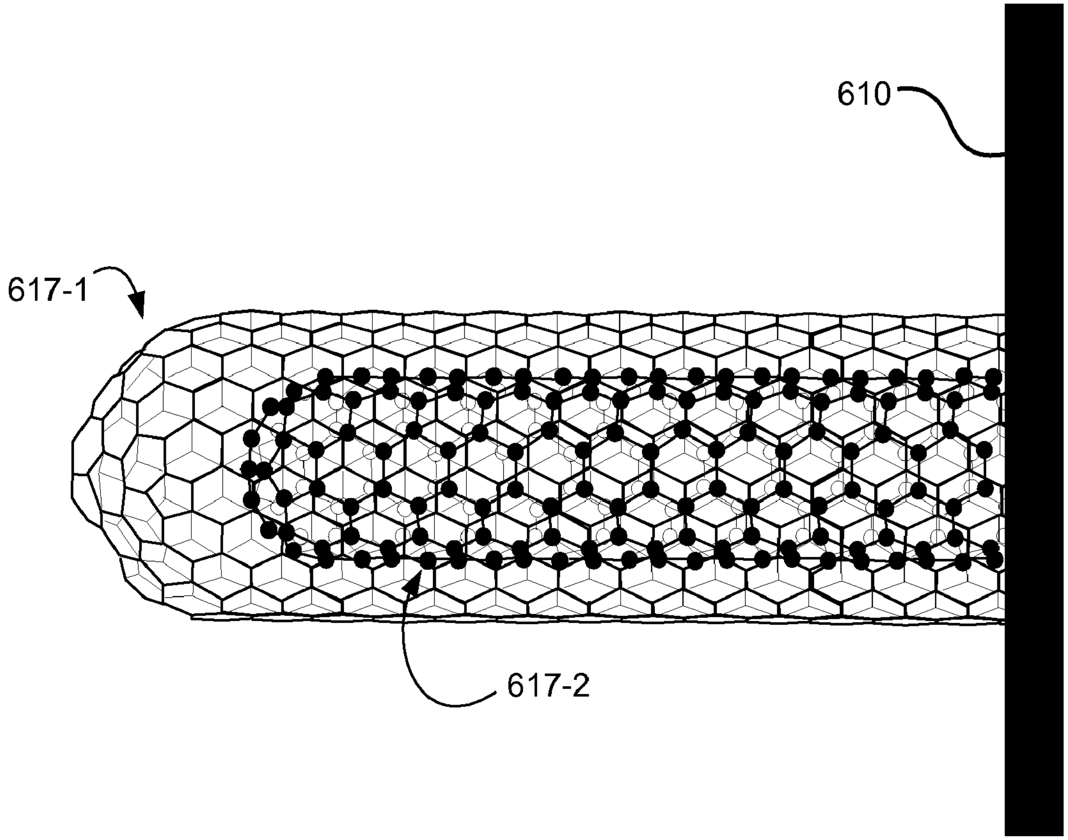

FIG. 6

CAPACITORS USING CARBON-BASED EXTENSIONS

CROSS-REFERENCES TO RELATED APPLICATIONS

[0001] This application claims the benefit of U.S. Prov. Pat. App. No. 61/206,677 filed Feb. 2, 2009, and titled "METHOD AND APPARATUS FOR UTILIZING A HIGH VOLTAGE CAPACITOR BANK AS A SOURCE OF SUSTAINED LOW VOLTAGE ELECTRICAL CURRENT," U.S. Prov. Pat. App. No. 61/223,688 filed Jul. 7, 2009, and titled "HIGH-VOLTAGE CAPACITOR SOURCE," and U.S. Prov. Pat. App. No. 61/254,903 filed Oct. 26, 2009, and titled "HIGH-VOLTAGE CAPACITOR SOURCE." The entire contents of all these applications are incorporated herein by reference for all purposes.

FIELD

[0002] This application relates to high-density energy storage systems, components and manufacturing methods.

BACKGROUND

[0003] Capacitive interaction occurs in all electronic circuits and discrete capacitors are included to fulfill a variety of roles including frequency filtration, impedance matching and the production of electrical pulses and repetitive signals. Regardless of the complexity of the design of a capacitor, it can be thought of as two closely spaced conducting plates which may have equal and opposite charges (±Q) residing on them when a voltage (V) is applied. The scalar quantity called capacitance (C) is the ratio of the charge to the applied voltage. When the capacitance becomes large, a significant charge can be stored and the device can be used like a battery.

[0004] Generally speaking, batteries have a high energy density but can only delivery a relatively small current since the current must be generated by a chemical reaction occurring within each storage cell. By contrast, capacitors may have a low energy density but can discharge very quickly—a flexibility which is desirable for many applications. Superconducting magnetic energy storage (SMES) is an alternative, but still suffers from a low storage density combined with impractical mass and thermal complexities.

[0005] FIGS. **1A-1C** show prior art capacitor designs. FIG. **1A** shows a capacitor having electrical leads connected to conducting plates or electrodes **110**. An air-gap **115-1** is left between electrodes **110** so that when a voltage is applied, a positive charge accumulates on the electrode with a positive bias. This results in an opposite charge on the other electrode and an electric field pointing from left to right in FIG. **1A**. Each of the capacitors depicted in FIGS. **1A-1C** is symmetric, i.e. possesses the same capacitance regardless of which electrode receives the positive voltage.

[0006] In FIG. **1B**, the same capacitor has a dielectric material inserted in the space **115-2** between the electrodes **110**. The dielectric constant or relative permittivity of the dielectric material allows the amount of charge (the "capacity" or capacitance of the capacitor) stored on each electrode to increase for the same applied voltage. A higher relative permittivity increases the ability of the dielectric to adjust its distribution of charge in response to the applied voltage; a negative charge accumulates near the positive electrode and a positive charge near the negative electrode. A smaller electric field exists between the electrodes if the relative permittivity is higher.

[0007] The stored charge can be further increased by using an electric double-layer capacitor (EDLC) design. EDLC's have higher energy density than traditional capacitors and are sometimes referred to as "supercapacitors". However, the storage density of EDLC's (depicted in FIG. **1C**) can still be improved upon. Between electrodes **110**, a dielectric material **116** surrounds high surface area electrically-conducting granules **117** distributed in the gap **115-3**. A dielectric separator **118** is positioned between two regions of the embedded granules **117**. The surfaces of granules **117** on the left of separator **118** are positively charged while the granules **117** on the right develop negative surface charging. The effective surface area of the capacitor is increased which allows even more charge to be stored on electrodes **110** for a given voltage.

[0008] Despite these advances, further increases in energy storage density of capacitors may allow additional penetration for capacitors into market segments traditionally dominated by batteries.

BRIEF SUMMARY

[0009] Devices for storing energy at a high density are described. The devices include carbon-containing extensions which increase the surface area between a dielectric material and one or both of the electrodes. The dielectric material may have a high dielectric constant (high permittivity) and a high breakdown voltage, allowing a high voltage difference between paired electrodes to effect a high stored energy density.

[0010] Embodiments of the invention include a storage capacitor including a first electrode with a first surface region having a first surface area and a second electrode with a second surface region having a second surface area. The second surface is physically separated from the first electrode leaving a gap between the first and second electrodes to inhibit charge from flowing from one electrode to the other. The first surface region comprises carbon-containing extensions and a dielectric slab of dielectric material disposed in the gap and contacting the first surface and the second surface. The dielectric slab exhibits an effective relative permittivity.

[0011] Further embodiments of the invention include a method of forming a storage capacitor. The method includes providing a first electrode and a second electrode with a gap between them. The first electrode has a first surface region having a first surface area and the first surface region includes carbon-containing extensions. The method further includes flowing a flowable dielectric between the first and second electrodes and converting the flowable dielectric to a solid dielectric having an effective relative permittivity.

[0012] Additional embodiments and features are set forth in part in the description that follows, and in part will become apparent to those skilled in the art upon examination of the specification or may be learned by the practice of the disclosed embodiments. The features and advantages of the disclosed embodiments may be realized and attained by means of the instrumentalities, combinations, and methods described in the specification.

BRIEF DESCRIPTION OF THE DRAWINGS

[0013] A further understanding of the nature and advantages of the disclosed embodiments may be realized by reference to the remaining portions of the specification and the drawings.

[0014] FIGS. **1A-1C** are schematics of prior art capacitors.

[0015] FIG. **2** is a schematic of a high-voltage storage capacitor according to disclosed embodiments.

[0016] FIG. **3** is a flowchart for making a high-voltage storage capacitor according to disclosed embodiments.

[0017] FIG. **4** is a drawing of a portion of a carbon-containing electrode made with carbon velvet according to disclosed embodiments.

[0018] FIG. **5** is a drawing of carbon nanotubes on a carbon-containing electrode according to disclosed embodiments.

[0019] FIG. **6** is a drawing of a multi-walled carbon nanotube of a carbon-containing electrode according to disclosed embodiments.

[0020] In the appended figures, similar components and/or features may have the same reference label. Further, various components of the same type may be distinguished by following the reference label by a dash and a second label that distinguishes among the similar components. If only the first reference label is used in the specification, the description is applicable to any one of the similar components having the same first reference label irrespective of the second reference label.

[0021] In the appended figures, similar components and/or features may have the same reference label. Where the reference label is used in the specification, the description is applicable to any one of the similar components having the same reference label.

DETAILED DESCRIPTION

[0022] Devices for storing energy at a high density are described. The devices include carbon-containing extensions which increase the surface area between a dielectric material and one or both of the electrodes. The dielectric material may have a high dielectric constant (high permittivity) and a high breakdown voltage, allowing a high voltage difference between paired electrodes to effect a high stored energy density.

[0023] The quantity of energy stored in a capacitor is proportional to the capacitance which, in turn, is proportional to the contact area between the dielectric material and the electrodes as well as the effective relative permittivity of the dielectric material between the two electrodes. The electric double-layer capacitor (EDLC) described above owes its relatively high energy storage capacity to an increased effective surface area of the electrodes (and therefore increased capacitance). However, the EDLC design is not conducive to operation at elevated voltages since the electric fields can become high enough to result in a breakdown of the dielectric material. In embodiments, energy storage density and capacity can be improved by increasing the voltage across the electrodes. In fact, the storage capacity is proportional to the square of the voltage, making this an even more attractive parameter to increase when possible. An increase in voltage potential across a capacitor from about 1 volt to about 100 volts increases the storage capacity of the device by a factor of 10,000. Other voltages are possible and capacitors which allow the charging voltage to increase may rival storage battery energy densities while still allowing high output power to be generated.

[0024] Carbon-containing material can be a conductor provided there are many sp^2 bonds formed between carbon atoms. Graphite is a good conductor and is formed from layers of repeated sp^2 bonds (graphene). These sheets typically stack on top of each other at least at the microscopic level and allow the conduction of current generally along the sheets. Graphite is refractory and therefore can be used as a high temperature filament when large currents are passed through the material. Recent innovations in nanostructures have resulted in the availability of carbon nanostructures essentially made from rolled up graphene which can also be used to conduct electricity. Larger structures have also been studied and all these features are referred to herein as carbon-containing extensions.

[0025] In order to better understand and appreciate the invention, reference is made to FIGS. **2-3** which are a schematic view of and a method **300** of making a capacitor according to disclosed embodiments. Conducting bases **210** are electrically attached to electrical leads **205**. To further increase energy storage capacity, carbon-containing extensions **217** are formed (operation **302**) on the conducting bases **210** to form textured electrodes **211** by a wide variety of techniques to increase their surface area in contact with dielectric slab **216**. The combination of conducting base **210** and extensions **217** is referred to as the electrode **211** herein. To further increase storage capacity, a dielectric material slab **216** with a high relative permittivity and high breakdown field may be positioned between electrodes **211**.

[0026] Forming carbon-containing extensions **217** on a conducting base **210** may be referred to as texturing electrode **211** herein. A relatively simple texturing configuration will be described initially along with a general overview of assembly considerations. These assembly considerations apply to all the texturing configurations unless otherwise noted. Electrodes **211** are shown with many carbon-containing extensions **217** protruding from the conducting base **210** of the electrodes **211**. Each carbon-containing extension **217** is electrically conducting to allow the redistribution of charge enabling electrical energy to be stored. Carbon-containing extensions **217** are shown in electrical contact with conducting base **210**, but electrical contact is not required for operation as a capacitor. However, carbon-containing extensions **217** are both mechanically and electrically attached to the conducting bases **210** in embodiments. The conducting bases **210** serve as a substrate for attachment or growth of carbon-containing extensions **217** and the conducting base **210** may also be carbon-containing Carbon-containing extensions **217** and the conducting base **210** may be in mechanical contact so the smallest separation between carbon-containing extensions **217** from the opposing electrodes **211** can be controlled at least during the dielectric injection process. Textured electrode **211** may have a surface area which is larger than that of a flat but otherwise similar electrode by a factor of above or about 4, above or about 10, above or about 20, above or about 50, above or about 100, above or about 200 or above or about 500 in different embodiments. Carbon-containing components such as those described herein may "consist essentially of carbon" which means that other than carbon, trace amounts of other elements are possible. These trace amounts can be intentional but may be unintentional since trace amounts of impurities are often unavoidable. An example of an intentional treatment which may result in trace amounts of impurities is a surface treatment to promote wetting.

[0027] Such areas are calculated by methods appropriate for the nature of the surface. Some surfaces may be accessible by an atomic force microscope (AFM) when overhanging portions or fibers do not complicate or interfere with measurement by a physical tip. In the interest of unambiguously defining the area ratio, the lateral spacing of the data points may be several nanometers, the tip should be applied with a moderate force to avoid crashing and operated in tapping mode. Imaging software is capable of estimating the total surface area by tiling the surface with triangles. The surface can be tiled completely and the area of the triangles can be summed to determine the total area. In the case of columns, fibers or nanostructures, the dimensions can be estimated by approximating the objects on the surface as one or more geometric shapes. For example, a metal fiber from a "carpet" of metal fibers attached to an electrode base may be modeled as a cylinder having a diameter of a given number of microns. The exposed area of the carpet (the textured electrode) may be calculated by determining the outer area of a cylinder having average height for the metal fiber carpet. The total area supplied by the fibers themselves may be estimated by further multiplying by an estimate of the areal density of fibers and the base area. The estimate of the area of the fibers is added to the areas of the electrode base which are not covered by fibers to calculate the total exposed area. The estimate of the exposed area of the carpet is divided by the area of a flat (featureless) surface of the same planar dimensions. The surface area of a flat but otherwise similar electrode to an etched aluminum foil 2 cm×4 cm would be 8 cm^2, for example. Carbon nanostructures are small enough that a convention may be needed to define the location of the outer surface of the tubes. The diameter of a carbon nanotube, for example, should be estimated based on the average diameter an AFM tip may indicate if the nanotube were rotated below a tip operated according to the conventional parameters above. A model involving the operating parameters and a grapheme sheet would be sufficient to enable the estimation of cylinder dimensions commensurate with large fibers.

[0028] Exemplary carbon-containing extension structures may be formed by using CVD (chemical vapor deposition), laser ablation or an electric arc redistributing to deposit fingers **217** of carbon-containing material on electrodes **211** from carbon sources (e.g. hydrocarbon gases and carbon anodes). Many other methods can be used. Though FIG. **2** shows two textured electrodes **211**, it is also possible to have only one textured electrode **210** in embodiments. A vendor for carbon-containing structures is Energy Science Laboratories, Inc. of San Diego, Calif. Textured electrodes may more generally have carbon-containing extensions with a variety of orientations and do not need to be straight.

[0029] The formation of dielectric slab **216** is more complex when using textured electrodes **211**. Herein, the term dielectric slab will be used to refer to the region of dielectric between the extrema of the texture but also the region in amongst the texture (the fingers in this example). The energy storage capacity is increased when the dielectric is inserted within the texturing (between the fingers) because that increases the contact area. Fortunately, carbon-containing extensions are, as a rule, very strong and able to tolerate the formation of dielectric slabs in embodiments. The formation of dielectric slabs may involve grinding a dielectric into small enough granules to flow within fingers **217** and then placing the granules in amongst the fingers when assembling the device. A greater filling fraction increases the amount of energy which can be stored in the device. The high relative permittivity may be above or about 500, above or about 1000, above or about 2000, above or about 5000, above or about 10,000 or above or about 20,000 in different embodiments. The breakdown voltage of assembled devices may be above or about 1 kV per millimeter, above or about 2 kV per millimeter or above or about 4 kV per millimeter in different embodiments. Suitable ultra-high permittivity dielectric materials for the slab include ceramic perovskites suspended in a dielectric. Ceramic perovskites are a class of materials which includes barium titanate, strontium titanate and "Tungsten Bronze." Ceramic perovskites can exhibit a breakdown field of greater than 60 kV per millimeter. A vendor for ceramic perovskite suspensions is TPL, Inc. of Albuquerque, N. Mex.

[0030] Alternatively, a flowable dielectric may be flowed into the region between fingers **217**. A flowable dielectric may provide a greater filling fraction provided that the wetting properties are such that the flowable dielectric is drawn into the region between the fingers **217** rather than repulsed. Flowable dielectric may be actively induced to fill the gaps in the texture by applying a positive pressure pressing the liquid into the gaps. A vacuum may also be created in the vicinity of the texture to draw the liquid into the gaps. Depending on the chemistry of the liquid dielectric and the chemical structure/content on the surface of fingers **217**, wetting can often be manipulated by performing a surface pretreatment of either an acidic or basic aqueous solution. The wetting may also be improved by providing an additive to the liquid dielectric itself, keeping in mind that relative permittivity and electric breakdown field should both remain high enough for the intended application following assembly of the device.

[0031] A flowable dielectric may include a liquid solution along with dielectric granules in suspension (see operation **304**). During subsequent processing, the liquid solution may be evaporated leaving the dielectric granules in amongst the texture of the electrode(s). Alternatively, the liquid solution may become a solid after firing and offer a beneficial relative permittivity either alone or in combination with dielectric granules as in operation **306**. Generally speaking, flowable dielectrics may have a flow-enabling component which enables the material to be flowed in amongst the texture of electrodes **211**. Another approach involves applying molten dielectric in amongst the texture of electrodes **211** to fill the gaps. Voids or apertures in the dielectric slab may be avoided to increase the energy storage capacity for example.

[0032] Two flowable dielectrics may be flowed within the region between the two electrodes. A low viscosity dielectric may be flowed first to better penetrate the texture of one or both electrodes. A higher viscosity dielectric may then be flowed which does not need to penetrate the texture as completely but provides a higher dielectric constant than the first flowable dielectric in the regions where the higher viscosity flowable dielectric does penetrate. The viscosity may be adjusted by altering the viscosity of the liquid component of the flowable dielectric and/or by increasing the concentration of the solid dielectric granules which possess high dielectric constant. A dielectric slab in this example as well as the other exemplary slabs may include two or more dielectric layers each comprising a different dielectric material.

[0033] The flowable dielectric solidifies (or a liquid portion is removed, leaving a solid) after flowing into the region between fingers **217** in some embodiments. The solidification may result from simply waiting for the flow-enabling additive to evaporate from the material or the dielectric slab may be actively cured by shining light (e.g. ultraviolet light), raising the temperature (annealing), irradiating with an e-beam and/or similar processes known to those of skill in the art. Molten dielectric may solidify simply by cooling to a temperature below the melting temperature of the dielectric. Suitable dielectrics for flowing between textured electrodes **211** include polymer electrolytes designed for high permittivity and high voltage. Generally speaking, a polymer dielectric may be deposited by a variety of fabrication techniques including Langmuir-Blodgett, vapor deposition, laser/ion-beam ablation and casting it onto the electrode.

[0034] The flowable dielectric may be formed by grinding high relative permittivity material into granules and introducing the granules into a liquid. Such a solution may be referred to as a slurry and may contain crystals, binders and carrier fluids to promote flowability. A slurry, as with a liquid dielectric, is injected in and around the textured electrode. The liquid dielectric and the solid granules will likely have different relative permittivities (typically a lower permittivity for the liquid material and a higher permittivity for the solid granules). The combined or effective permittivity of the material between and amongst textured electrodes will depend on both permittivities and likely end up displaying a value between the lower and higher permittivities. A sol-gel process may also be used, in which a fluid transitions from a more fluid solution into a more viscous solution during use. A slurry may be actively inserted in amongst the texture of an electrode through pressurization, applying a vacuum to draw the slurry into the texture, relying on capillary forces or by applying an electromagnetic field (electrophoresis). Following penetration of the texture by the flowable dielectric, the flowable dielectric may be solidified by any number of processes including firing.

[0035] Solid or semi-solid dielectric material may also be placed into the region adjacent to the textured electrode. Heating one or both the dielectric and the electrode may allow the dielectric to become fluid and flow in amongst the texture. The dielectric may be extruded and then braided, woven or knitted to facilitate the process. The dielectric mass may then be heated or fired to produce a cohesive mass where the dielectric lies in intimate contact with the texture of electrodes **211**. Firing the dielectric may promote the bond between the electrode and the dielectric but is also helpful in increasing the electrical permittivity of many dielectrics in one embodiment.

[0036] During assembly discrete spacers may be used to maintain a separation between the electrodes during insertion and processing of the dielectric slab. High-temperature-tolerant separator films are also available for this purpose. A cut-out in the shape of the dielectric slab may be made in the separator film and the film may be used to provide a contiguous separation around the perimeter of the capacitor.

[0037] In most of the ensuing examples of electrode texture, a capacitor may be formed from one or more layers of dielectric. An electrode may be placed between each dielectric slab. In the case of a multi-layer capacitor, processing of the dielectric slabs may be done simultaneously. Upon completion of a multi-layer capacitor, they may be combined in series or in parallel depending on the application. In a parallel configuration every other electrode is connected electrically.

[0038] As indicated, many designs are possible for increasing the effective surface area (texturing) the electrodes. FIG. **4** is a drawing of a portion of a carbon-containing electrode made with carbon velvet according to embodiments. Carbon velvet is a subset of what is referred to herein as textured electrodes having carbon-containing extensions **417**. Each carbon-containing extension is generally in the several micron to a hundred micron range. The diameter of carbon-containing extensions in carbon velvet may be less than 100 μm, less than 50 μm, less than 20 μm or less than 10 μm in different embodiments. The diameter may also be greater than 1 μm, greater than 5 μm, greater than 10 μm and greater than 20 μm in different embodiments. Each of the upper bounds may be combined with one of the lower bounds to form additional ranges for the diameters of carbon-containing extensions in carbon velvet in additional embodiments. A variety of densities and lengths of the carbon-containing extensions may be used based on desired performance or the ability of dielectric material to penetrate. Extension densities may be described in terms of the percentage of the flat portion of electrode **410** which is covered by the trunks of the extensions. For carbon velvet, the carbon-containing extension trunk coverage may be greater than 0.5%, greater than 1%, greater than 2%, greater than 5% or greater than 10% in different embodiments. Average extension lengths will typically be much longer than the effective trunk diameter (some extensions may deviate from round and there may be a distribution of lengths and diameters as shown in FIG. **4**). The mean aspect ratio of a sample of carbon velvet (or other extensions described herein) is defined as the average extension length in the sample to the effective trunk diameter. The mean aspect ratio may be greater than 5, greater than 10, greater than 20, greater than 50 or greater than 100 in different embodiments.

[0039] FIG. **5** is a drawing of carbon nanotube on a carbon-containing electrode according to disclosed embodiments. Nanotubes are much smaller than the extensions present in carbon velvet, generally about three orders of magnitude smaller in diameter. The structure of carbon nanotubes looks like a rolled sheet of graphene and may be capped (shown) or uncapped. A graphene sheet of a certain orientation forms the carbon nanotubes **517**. The electrode **510** will generally have some carbon content especially near the surface from which the carbon-containing extensions are formed, but other materials may be used for the substrate (the base of the electrode). Nanotubes may also be formed using different orientations of graphene. Essentially all the nanotubes used as carbon-containing extensions can have one orientation. Alternatively, multiple orientations may be present on a single capacitive storage device.

[0040] Without binding the claim coverage to theories which may or may not be entirely correct, some discussion of the location of charge storage during operation is probably warranted. Due to the nature of carbon nanotubes, which often have a single crystal structure without polycrystalline boundaries, the conductivity up and down the shaft of these smaller carbon-containing extensions is much higher than the extensions in carbon velvet and the like. Whereas the charge storage on strands of carbon velvet may reside up and down the strand during operation, it is thought that carbon nanotubes may carry concentrated charge near the tip farthest away from the substrate. This may mean that nanotubes should be made with a smaller mean aspect ratio than carbon velvet as contact area with the dielectric would not be the parameter to control charge storage. The density of nanotubes would, however, provide control of charge storage. The diameter of carbon nanotubes used for carbon-containing extensions may be less than 20 nm, less than 10 nm, less than 5 nm or less than 2 nm in different embodiments.

[0041] For the purposes of calculating the coverage of carbon nanotubes on the electrode, trunk size will be calculated based on the area of a circle mentally drawn through the center of the outermost wall of carbon atoms near the connection with the electrode. Thereafter carbon-containing extension densities may be calculated for carbon nanotubes as they were with the larger carbon fibers. For nanotubes, the carbon-containing extension coverage may be greater than 0.5%, greater than 1%, greater than 2%, greater than 5% or greater than 10% in different embodiments.

[0042] Deviations from the relatively simplistic carbon-containing extensions discussed thus far are possible. For example, FIG. **6** is a drawing of a multi-walled carbon nanotube of a carbon-containing electrode attached to a base conducting substrate **610** according to disclosed embodiments. The outer nanotube **617-1** and the inner nanotube **617-2** have different diameters allowing the configuration shown. Multi-walled carbon nanotubes are easier to grow which may result in their presence in some off-the-shelf nanotube products.

[0043] The mean aspect ratio for carbon nanotubes in the capacitive application described herein may be greater than or about 5, greater than or about 10, greater than or about 20 or greater than or about 50 in different embodiments. The mean aspect ratio may be less than or about 10, less than or about 20, less than or about 50 or less than or about 100 in different embodiments. Each of the upper bounds may be combined with one of the lower bounds to form additional ranges for the mean aspect ratios of carbon nanotube extensions in additional embodiments.

[0044] Many of the carbon-containing extensions discussed herein have been described and shown as extending perpendicularly from the substrate for simplicity only. Either intentionally or due to vagaries in the manufacturing process, extensions may have varying curvature and may even have a trunk base which is oriented at a slant. Other known deviations which have been observed include branching so that carbon-containing extensions form a Y-shape. Both the extensions in carbon velvet and the nanotubes may display any combination of the disclosed deviations from time-to-time. These deviations are not thought to affect the capacitance of a produced device significantly.

[0045] Having disclosed several embodiments, it will be recognized by those of skill in the art that various modifications, alternative constructions, and equivalents may be used without departing from the spirit of the disclosed embodiments. Additionally, a number of well known processes and elements have not been described in order to avoid unnecessarily obscuring the present invention. While the principles of the disclosure have been described above in connection with specific apparatuses and methods, it is to be clearly understood that this description is made only by way of example and not as limitation on the scope of the disclosure.

[0046] As used herein and in the appended claims, the singular forms “a”, “an”, and “the” include plural referents unless the context clearly dictates otherwise. Thus, for example, reference to “a process” includes a plurality of such processes and reference to “the dielectric material” includes reference to one or more dielectric materials and equivalents thereof known to those skilled in the art, and so forth.

[0047] Also, the words “comprise,” “comprising,” “include,” “including,” and “includes” when used in this specification and in the following claims are intended to specify the presence of stated features, integers, components, or steps, but they do not preclude the presence or addition of one or more other features, integers, components, steps, acts, or groups.

What is claimed is:

1. A storage capacitor for storing a high density of electrical charge comprising:

a first electrode with a first surface region having a first surface area and a second electrode with a second surface region having a second surface area,

wherein the second electrode is physically separated from the first electrode leaving a gap between the first and second electrodes to inhibit charge from flowing across the gap from one electrode to the other, and

wherein the first surface region comprises a plurality of carbon-containing extensions to increase the first surface area, wherein the plurality of carbon-containing extensions have a mean aspect ratio of greater than 5, a carbon-containing extension trunk coverage greater than 0.1% and each carbon-containing extension comprises sp^2-bonded carbon; and

a dielectric slab of dielectric material disposed in the gap and contacting the first surface and the second surface, wherein the dielectric slab exhibits a high effective relative permittivity above or about 500.

2. The storage capacitor of claim **1** wherein the carbon-containing extensions consist essentially of carbon.

3. The storage capacitor of claim **1** wherein the carbon-containing extensions consist essentially of sp^2-bonded carbon.

4. The storage capacitor of claim **1** wherein the carbon-containing extensions extend generally towards the second electrode.

5. The storage capacitor of claim **1** wherein the first surface region comprises carbon velvet.

6. The storage capacitor of claim **1** wherein the carbon-containing extensions comprise single-walled carbon nanotubes.

7. The storage capacitor of claim **1** wherein the carbon-containing extensions consist essentially of single-walled carbon nanotubes.

8. The storage capacitor of claim **1** the carbon-containing extension trunk coverage may be greater than one of 0.5%, 1%, 2%, 5% or 10%.

9. The storage capacitor of claim **1** wherein the carbon-containing extensions comprise carbon nanotubes having a mean length below about one of 100 nm, 50 nm, 20 nm or 10 nm.

10. The storage capacitor of claim **1** wherein the carbon-containing extensions comprise carbon nanotubes having a mean length above about one of 3 nm, 10 nm, 20 nm or 50 nm.

11. The storage capacitor of claim **1** wherein the second surface region also comprises carbon-containing extensions.

12. The storage capacitor of claim **1** wherein the high effective relative permittivity is greater than or about one of 1000 or 2000.

13. The storage capacitor of claim **1** wherein the dielectric material comprises a ceramic perovskite.

14. The storage capacitor of claim **13** wherein the dielectric material comprises tungsten bronze.

15. The storage capacitor of claim **1** wherein the first surface area is greater than an otherwise similar electrode made with a flat surface by a multiplicative factor greater than 4, 10, 50, 100 or 500.

16. The storage capacitor of claim **1** wherein the storage capacitor is configured to exhibit a breakdown voltage above or about 1 kV per millimeter, above or about 2 kV per millimeter or above or about 4 kV per millimeter.

17. A method of forming a storage capacitor, the method comprising:

providing a first electrode and a second electrode with a gap between them to inhibit charge from flowing from one electrode across the gap to the other, wherein the first electrode has a first surface region having a first surface area and the first surface region comprises carbon-containing extensions to increase the first surface area, wherein the plurality of carbon-containing extensions have a mean aspect ratio of greater than 5, a carbon-containing extension trunk coverage greater than 0.1% and each carbon-containing extension comprises sp^2-bonded carbon; and

flowing a flowable dielectric between the first and second electrodes and in amongst the carbon-containing extensions; and

converting the flowable dielectric to a solid dielectric having a high effective relative permittivity above or about 500.

18. The method of claim **17** further comprising firing the solid dielectric at high temperature to increase the effective relative permittivity.

19. The method of claim **17** wherein the high effective relative permittivity is greater than or about one of 1000, 2000, 5000 or 10,000.

20. The method of claim **17** wherein the operation of flowing a flowable dielectric comprises the sequential steps of flowing a first flowable dielectric followed by flowing a second flowable dielectric, wherein a viscosity of the first flowable dielectric is less than the viscosity of the second flowable dielectric.

21. The method of claim **17** wherein the operation of flowing the flowable dielectric between the first and second electrodes further comprises flowing the dielectric in amongst the carbon-containing extensions whereby the contact area between the dielectric and the first metal electrode is greater than or about a contact area with an otherwise-similar untextured metal electrode by a multiplicative factor greater than one of 4, 10, 50, 100 or 500.

22. The method of claim **17** wherein the second metal electrode has a second surface region and a second surface area and the second surface region comprises second carbon-containing extensions.

23. The method of claim **22** wherein the operation of flowing the flowable dielectric between the first and second electrodes further comprises flowing the dielectric in amongst the second carbon-containing extensions whereby the contact area between the dielectric and the second metal electrode is greater than or about a contact area with an otherwise-similar untextured metal electrode by a multiplicative factor greater than one of 4, 10, 50, 100 or 500.

24. The method of claim **17** wherein the operation of converting the flowable dielectric to the solid dielectric comprises curing the flowable dielectric with at least one of an e-beam, ultraviolet light radiation or heat.

25. The method of claim **17** wherein the operation of converting the flowable dielectric to the solid dielectric comprises annealing the flowable dielectric.

26. The method of claim **17** wherein the flowable dielectric comprises solid granules of material whereby the effective relative permittivity of the solid dielectric is increased.

* * * * *