Aug. 28, 1945. T. R. SMITH 2,383,691

WINDOW CONSTRUCTION

Filed Nov. 13, 1942

Fig. 1

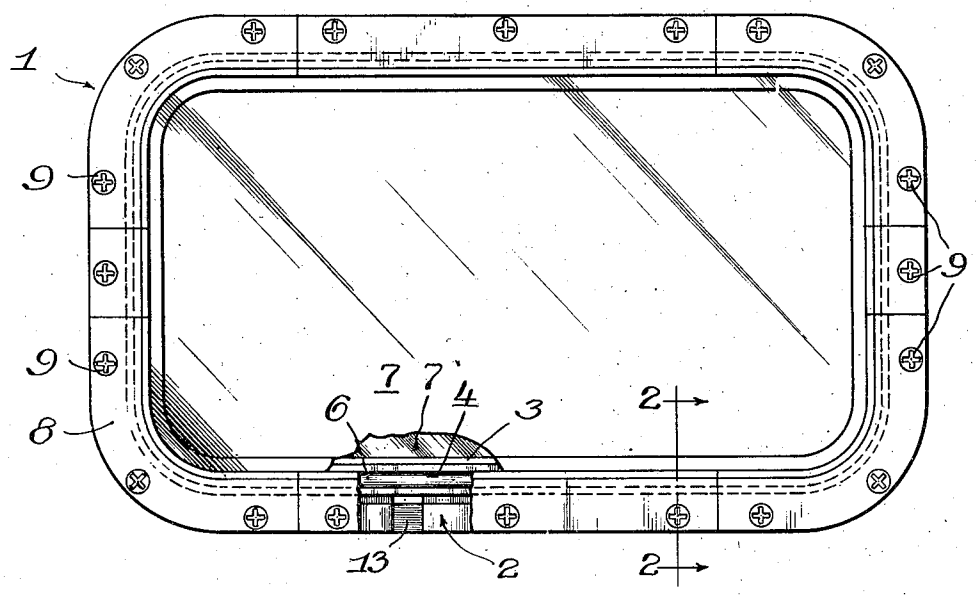

Fig. 2

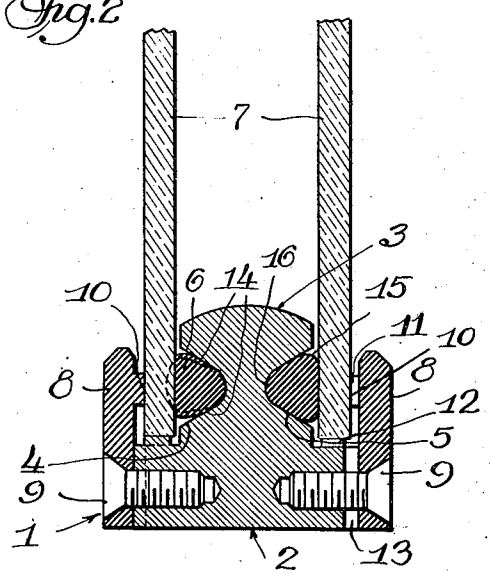

Fig. 3

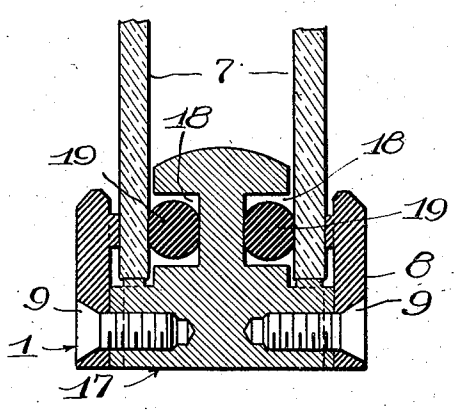

Witness:
Chas. L. Kourch

INVENTOR.
Thomas R. Smith,
BY Parkinson & Lane
Attys.

Patented Aug. 28, 1945

2,383,691

UNITED STATES PATENT OFFICE

2,383,691

WINDOW CONSTRUCTION

Thomas R. Smith, Newton, Iowa, assignor to The Maytag Company, Newton, Iowa, a corporation of Delaware

Application November 13, 1942, Serial No. 465,435

1 Claim. (Cl. 20—56.5)

The present invention relates to window constructions and especially to a novel sealing means for a double glazed assembly in which the pane of glass are mounted and maintained in spaced relation.

Among the objects of the present invention is the provision of a novel seal cooperating with each pane of glass in a manner to most effectively seal the space between the panes. In the preferred embodiment, each sealing element or packing member is of substantially wedge-shape and mounted in a substantially V-shaped groove or recess provided in the sash rail with the base of the sealing element or packing engaging the inner face of the glass adjacent an edge thereof. In addition to sealing the space between the panes, the sealing elements are so disposed as to retain the glass with a resilient gripping pressure to thereby effectively retain the glass and eliminate danger of breakage of the panes when the glass is subjected to stresses or strains.

Further objects are to provide a construction of maximum simplicity, efficiency, economy and ease of assembly and operation, and such further objects, advantages and capabilities as will later more fully appear and are inherently possessed thereby.

The invention further resides in the construction, combination and arrangement of parts illustrated in the accompanying drawing, and while there is shown therein a preferred embodiment, it is to be understood that the same is susceptible of modification and change, and comprehends other details, arrangements of parts, features and constructions without departing from the spirit of the invention.

In the drawing:

Figure 1 is a view in front elevation of the novel window sash with a portion broken away to more clearly disclose the interior construction.

Figure 2 is an enlarged fragmentary view in vertical cross section taken in a plane represented by the line 2—2 of Figure 1.

Figure 3 is a view similar to Figure 2 but disclosing an alternate construction of sealing means.

Referring more particularly to the illustrative embodiment shown in Figures 1 and 2 of the drawing, the window sash 1 comprises a side or sash rail 2 having a reduced inwardly extending portion 3 provided with oppositely opening substantially V-shaped grooves or recesses 4 and 5. Positioned within each recess or groove is a substantially wedge-shaped sealing element or packing 6 formed of a resilient material such as natural or synthetic rubber. Against the base or projecting sealing surface of each sealing element is mounted a pane of glass 7 and this pane is retained by means of a clamping strip or molding 8, the latter being secured to the side rail 2 by suitable means such as flat-head or countersunk machine screws or other suitable securing means 9.

In order to permit suitable drainage from the exterior and interior of the window sash, the abutting face 10 of the clamping strip or molding 8 is slotted at 11 and the sash rail 2 is slotted at 12 and 13 throughout their length to permit proper drainage to the exterior of the sash setting of any condensate collected within and between the sash rail and its moldings.

In order to provide a most effective seal between the sash rail and the spaced panes of glass 7, the sealing elements 6 when not compressed have their sides 14 disposed at an angle of approximately 45° and with the side walls of the recess disposed at an angle of approximately 60° to permit the sealing element to be readily compressed when pressure is applied through tightening of the machine screws 9. This angular relationship is more clearly shown in dotted outline in Figure 2. Thus as the machine screws are tightened and the molding is moved inwardly into contact with the sealing element or packing, the rounded base or sealing surface of the latter is compressed, sufficient space being left at each side of the sealing element and between it and the side walls of the recess, to allow for pivoting action of the sealing element during and even after it has been compressed into its normal operating position. In order to prevent the corners 15 of the seal from being extruded and pinched between the adjacent angular surfaces of the side rail and the adjacent surfaces of the glass, these corners 15 are shown as rounded. The vertex 16 of the sealing elements is also rounded so that it may pivot within the rounded or curved base of the recesses 4 and 5 and maintain the sealing effect should the glass be subjected to longitudinal movement.

Figure 3 discloses an alternate construction in which the side rail 17 is formed with oppositely opening substantially channel-shaped recesses 18 adapted to receive a sealing element 19 of circular cross section. The diameter or cross section of each sealing element is less than the width of the recesses or grooves 18 so as to permit the sealing element to be placed under compression when the clamping strip 8 is applied. In other respects this construction is similar to that shown

in Figures 1 and 2 and similar reference characters have been applied to the corresponding parts.

The sash rail and clamping or molding strips in either form of the invention are preferably of metal, although they may be formed of wood or other material suitable for the purpose.

Having thus disclosed my invention, I claim:

A window sash construction for mounting a pair of window panes in spaced relation, comprising a sash rail having a ledge at each side thereof for supporting a pane and a reduced projection having a substantially V-shaped recess in each side of the projection and opening outwardly therefrom, a substantially wedge-shaped resilient sealing ring composed of rubber-like material in each recess, said ring prior to sealing deformation being wedge shaped and having the base thereof rounded and projecting beyond the recess opening for resilient sealing contact with a pane, the base of each recess and the vertex of each sealing element having substantially the same rounded contour and with the opposite sides of the sealing element spaced from the sides of the recess, and a clamping molding secured to each side of the rail and having a pane engaging part adapted to engage the exterior face of a pane and force the interior face of the pane into sealing contact with the base of a sealing element to deform the rounded base into substantially flat sealing contact with the pane but leaving spaces between the side walls of the recess and the sides of the ring.

THOMAS R. SMITH.