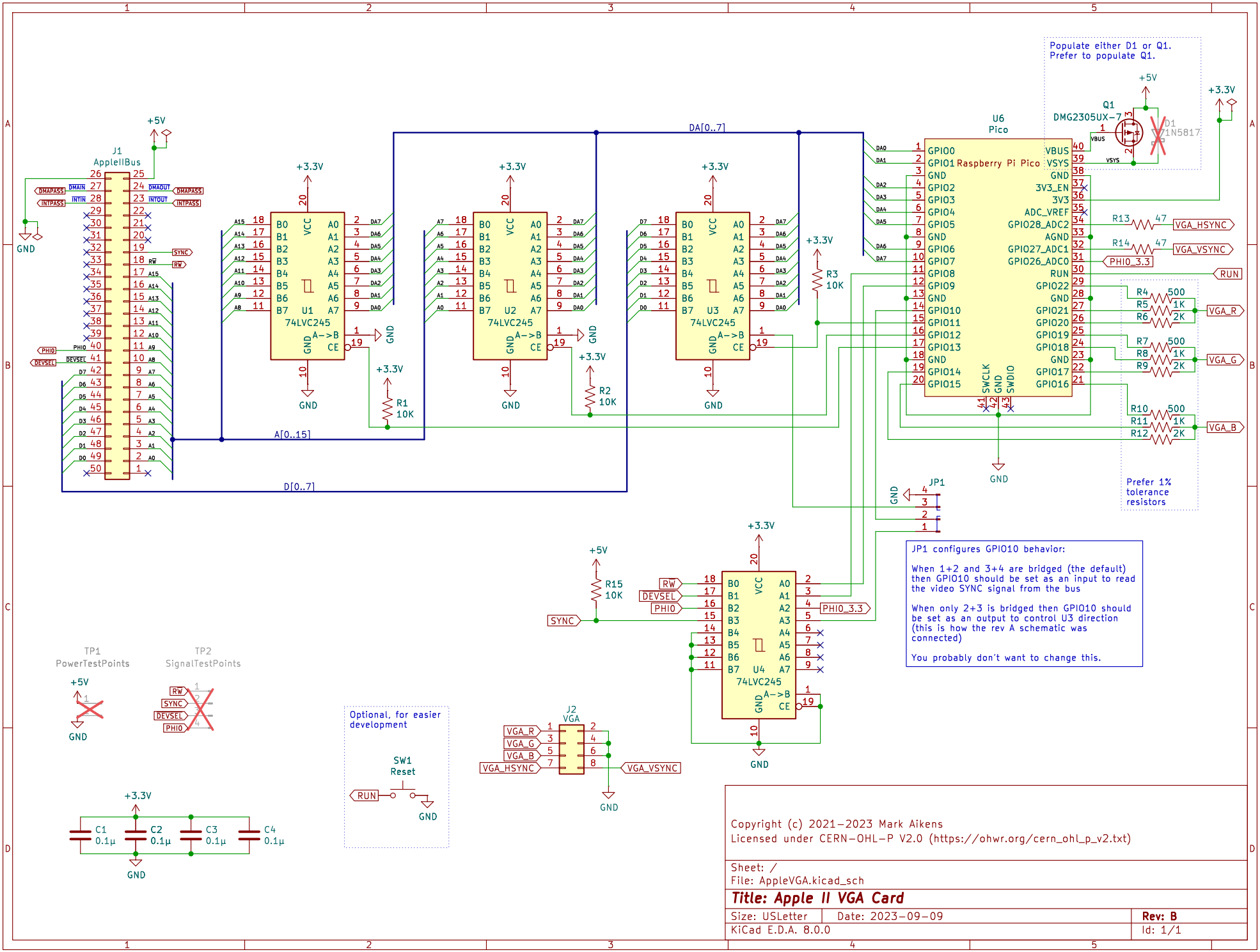

Copyright (c) 2021–2023 Mark Aikens
Licensed under CERN–OHL–P V2.0 (https://ohwr.org/cern_ohl_p_v2.txt)

Sheet: /
File: AppleVGA.kicad_sch

Title: Apple II VGA Card

Size: USLetter	Date: 2023–09–09	Rev: B
KiCad E.D.A. 8.0.0		Id: 1/1