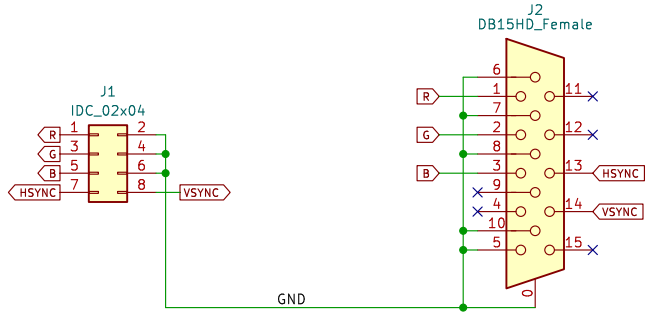

Copyright (c) 2023 Mark Aikens
Licensed under CERN-OHL-P V2.0 (https://ohwr.org/cern_ohl_p_v2.txt)

Sheet: /
File: AppleVGA-Connector.kicad_sch

Title: Apple II VGA Connector Board

Size: USLetter	Date: 2023-09-08	Rev: A
KiCad E.D.A. 8.0.0		Id: 1/1