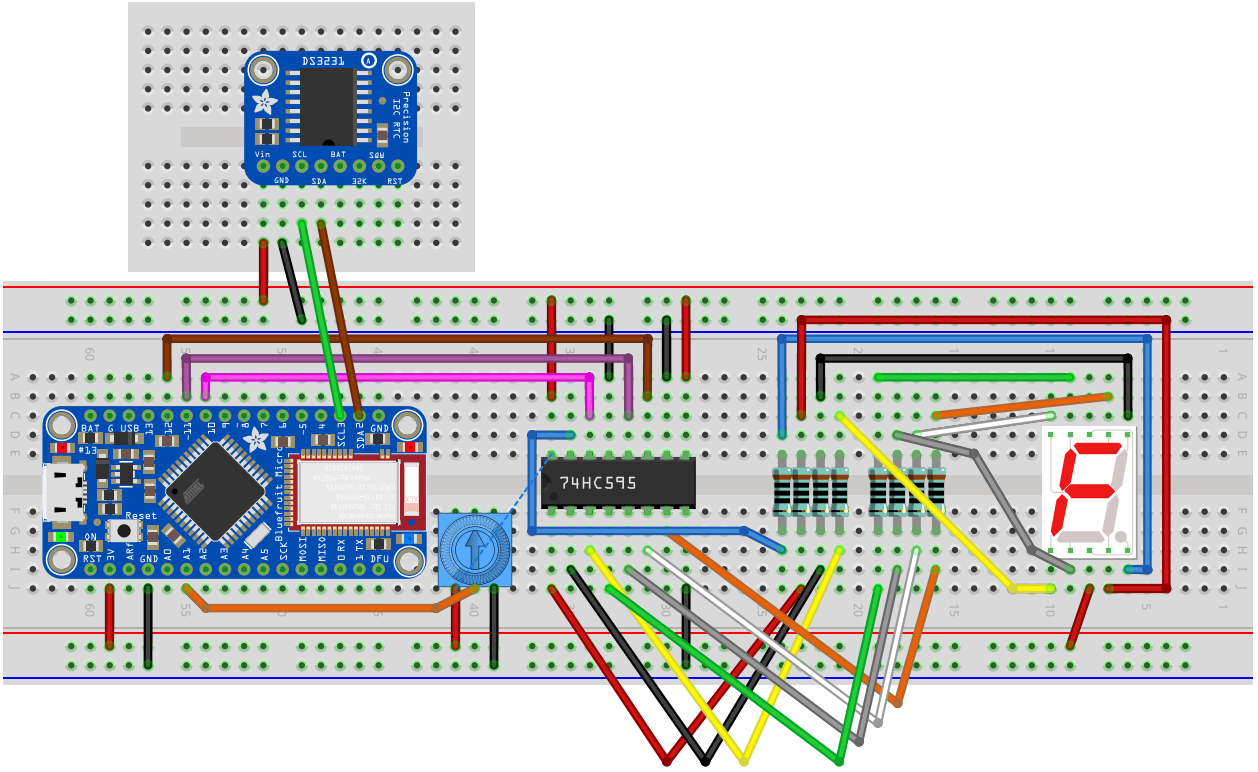
DS3231
Precision
I2C RTC
Vin
SCL
BAT
SQW
GND
SDA
32K
RST
74HC595
Reset
fritzing