C.I.P.	44 Rem. Mag. Country of Origin: US	TAB.	IV
		Date	86-12-14
		Revision	20-11-10

Alternative Names: 44 Magnum - 44 Mag.

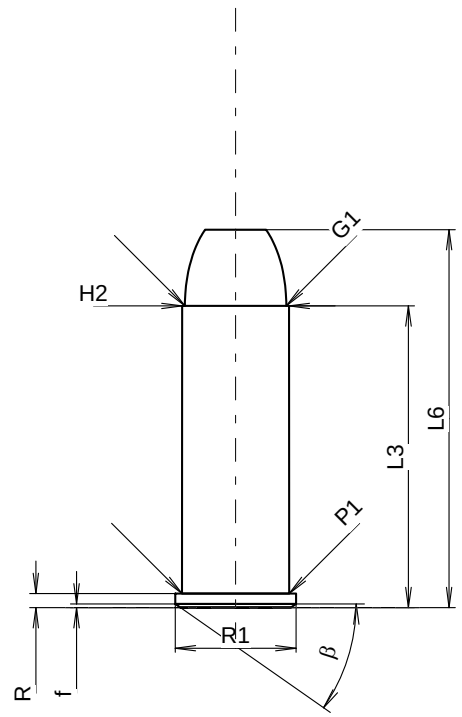

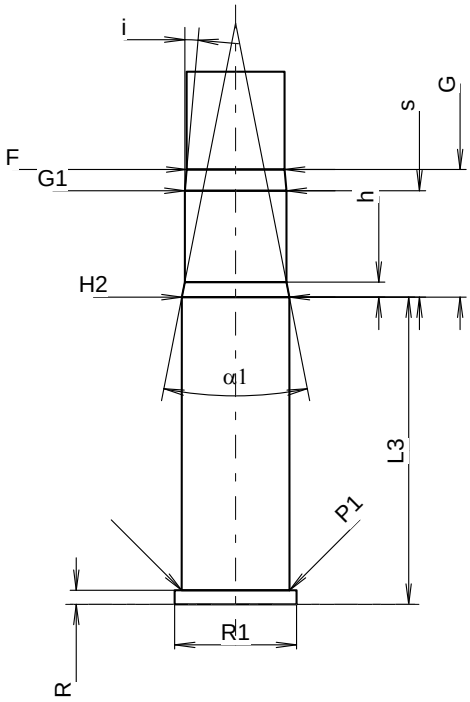

Scale 1.22:1

CARTRIDGE MAXI

Lengths

L1	=		
L2	=		
L3 1)	=	32.64	
L4	=		
L5	=		
L6	=	40.89	

Case Head

R 1)	=	1.52	-0.25
R1	=	13.06	
R3	=		
E	=		
E1	=		
e min	=		
δ	=		
f	=	0.40	
β	=	35°	

Powder Chamber

P1	=	11.61
P2	=	

Junction Cone

α	=	
S	=	
r1 min	=	
r2	=	

Collar

H1	=	
H2 1)	=	11.58

Projectile

G1 1)	=	10.97
G2	=	
F	=	
L3+G 1)	=	46.44

Pressures (Energies)
Method Transducer

Pmax	=	2800	bar
PK	=	3220	bar
PE	=	3640	bar
M	=	17.50	

Miscellaneous Dimensions

Fe 1)	=	0.25
delta L	=	

CHAMBER MINI

Lengths

L1	=	
L2	=	
L3 1)	=	33.23

Breech

R 1)	=	1.52
R1	=	13.18
R2	=	
R3	=	
r	=	

Powder Chamber

E	=	
P1 1)	=	11.66
P2	=	

Junction Cone

α	=	
S	=	
r1 max	=	
r2	=	

Collar

H1	=	
H2 1)	=	11.63

Commencement of Rifling

G1 1)*	=	10.99
G 1)	=	13.80
α1 *	=	22°12'
h	=	1.63
s	=	11.51
i 1)*	=	5°
w	=	

Barrel

F 1)*	=	10.59
Z 1)	=	10.90

Grooves

b	=	2.73	
N	=	6	
u	=	508.00	
Q	=	90.65	mm²

Dimensions in << mm >>
Dimensions and Tolerances for Proof Barrels
see Appendix CR 1.

Notes: 1) Check for safety reasons
* Basic dimensions