C.I.P.	7,62 x 53 R Country of Origin: FI	TAB. II Date 84-06-14 Revision 02-05-15

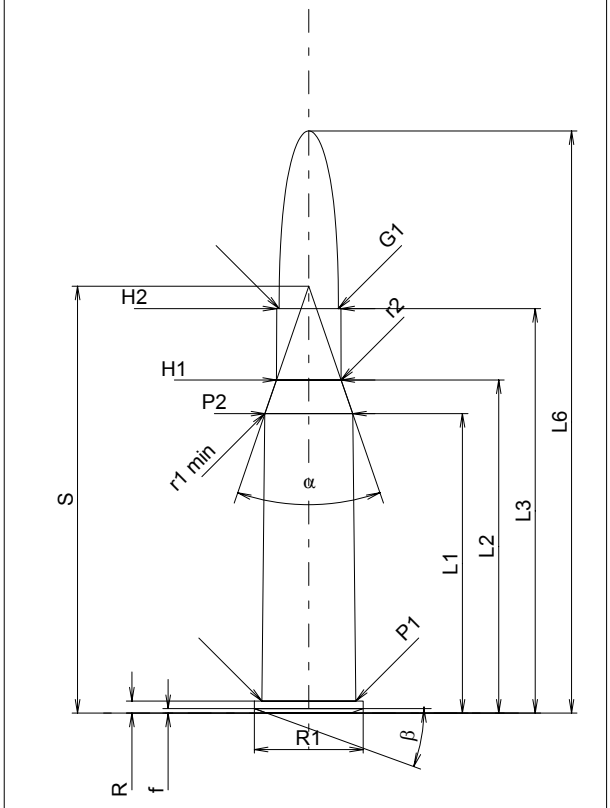

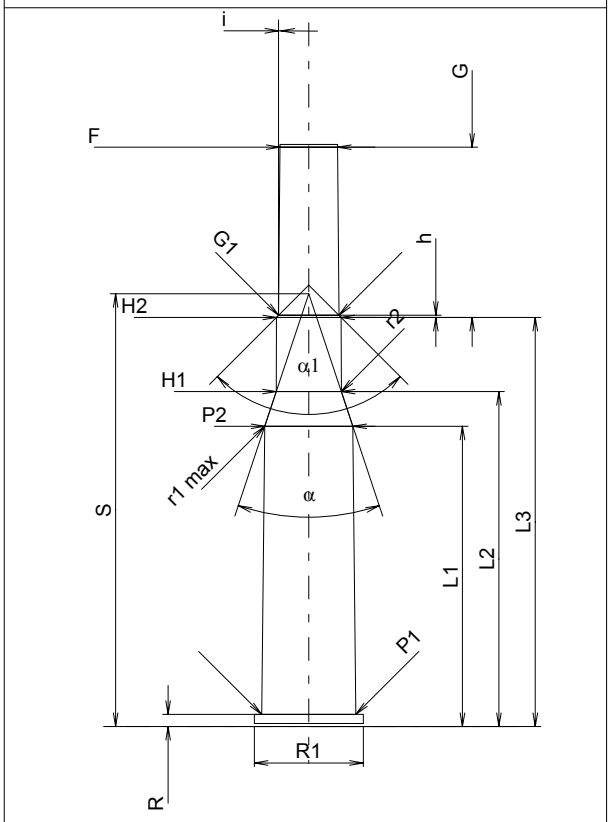

Scale 1:1

CARTRIDGE MAXI

Lengths

L1 *	=	39.61	
L2 *	=	44.05	
L3 1)	=	53.50	
L4	=		
L5	=		
L6	=	77.00	

Case Head

R 1)	=	1.60	-0.25
R1	=	14.40	
R3	=		
E	=		
E1	=		
e min	=		
δ	=		
f	=	0.60	
β	=	20°	

Powder Chamber

P1	=	12.42
P2 *	=	11.61

Junction Cone

α	=	38°01'38"
S	=	56.46
r1 min	=	0.50
r2	=	3.00

Collar

H1 *	=	8.55
H2 1)	=	8.50

Projectile

G1 1)	=	7.85
G2	=	
F	=	
L3+G 1)	=	76.02

Pressures (Energies)
Method Transducer

Pmax	=	3900	bar
PK	=	4485	bar
PE	=	4875	bar
M	=	25.00	
EE	=	3960	Joule

Miscellaneous Dimensions

Fe 1)	=	0.10
delta L	=	

CHAMBER MINI

Lengths

L1 *	=	39.70
L2 *	=	44.30
L3 1)	=	54.10

Breech

R 1)	=	1.60
R1	=	14.43
R2	=	
R3	=	
r	=	

Powder Chamber

E	=	
P1 1)	=	12.45
P2 *	=	11.67

Junction Cone

α	=	36°47'42"
S	=	57.24
r1 max	=	0.70
r2	=	3.00

Collar

H1 *	=	8.61
H2 1)	=	8.55

Commencement of Rifling

G1 1)*	=	7.98
G 1)*	=	22.52
α1	=	90°
h *	=	0.29
s	=	
i 1)	=	0°30'09"
w	=	

Barrel

F 1)*	=	7.59
Z 1)	=	7.83

Grooves

b	=	4.20	
N	=	4	
u	=	300.00	
Q	=	47.38	mm²

Dimensions in << mm >>
Dimensions and Tolerances for Proof Barrels
see Appendix CR 1.

Notes: 1) Check for safety reasons
* Basic dimensions