| C.I.P. | 7,62 x 54 R<br>Country of Origin: SU | TAB. II<br>Date 84-06-14<br>Revision 14-05-20 |
|---|---|---|

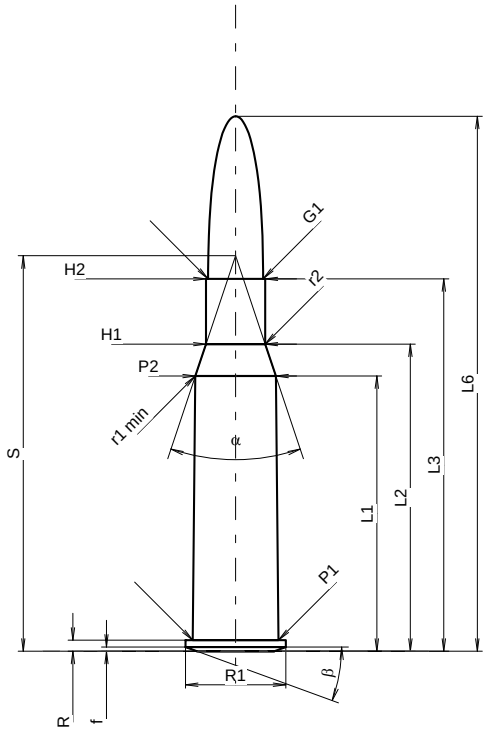


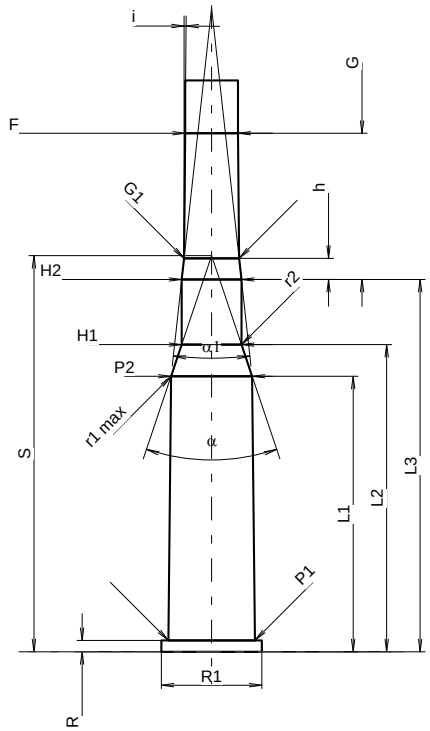


Scale 1:1.09

## CARTRIDGE MAXI

**Lengths**

| | | | |
|---|---|---|---|
| L1 * | = | 39.70 | |
| L2 * | = | 44.30 | |
| L3 1) | = | 53.72 | |
| L4 | = | | |
| L5 | = | 57.00 | |
| L6 | = | 77.16 | |

**Case Head**

| | | | |
|---|---|---|---|
| R 1) | = | 1.60 | -0.25 |
| R1 | = | 14.48 | |
| R3 | = | | |
| E | = | | |
| E1 | = | | |
| e min | = | | |
| δ | = | | |
| f | = | 0.60 | |
| β | = | 20° | |

**Powder Chamber**

| | | |
|---|---|---|
| P1 | = | 12.37 |
| P2 * | = | 11.61 |

**Junction Cone**

| | | |
|---|---|---|
| α | = | 37°01'9" |
| S | = | 57.04 |
| r1 min | = | 0.50 |
| r2 | = | 0.50 |

**Collar**

| | | |
|---|---|---|
| H1 * | = | 8.53 |
| H2 1) | = | 8.53 |

**Projectile**

| | | |
|---|---|---|
| G1 1) | = | 7.92 |
| G2 | = | |
| F | = | |
| L3+G 1) | = | 74.80 |

**Pressures (Energies)**
**Method Transducer**

| | | | |
|---|---|---|---|
| Pmax | = | 3900 | bar |
| PK | = | 4485 | bar |
| PE | = | 4875 | bar |
| M | = | 25.00 | |
| EE | = | 3960 | Joule |

**Miscellaneous Dimensions**

| | | |
|---|---|---|
| Fe 1)4) | = | 0.10 |
| delta L | = | |

## CHAMBER MINI

**Lengths**

| | | |
|---|---|---|
| L1 * | = | 39.73 |
| L2 * | = | 44.30 |
| L3 1) | = | 53.70 |

**Breech**

| | | |
|---|---|---|
| R 1) | = | 1.63 |
| R1 | = | 14.50 |
| R2 | = | |
| R3 | = | |
| r | = | |

**Powder Chamber**

| | | |
|---|---|---|
| E | = | |
| P1 1) | = | 12.48 |
| P2 * | = | 11.68 |

**Junction Cone**

| | | |
|---|---|---|
| α 1) | = | 37°07'59" |
| S | = | 57.12 |
| r1 max | = | 0.50 |
| r2 | = | 0.50 |

**Collar**

| | | |
|---|---|---|
| H1 * | = | 8.61 |
| H2 1) | = | 8.60 |

**Commencement of Rifling**

| | | |
|---|---|---|
| G1 1)* | = | 7.93 |
| G 1)* | = | 21.08 |
| α1 | = | 12°31'48" |
| h * | = | 3.05 |
| s | = | |
| i 1)* | = | 0°29'33" |
| w | = | |

**Barrel**

| | | |
|---|---|---|
| F 1)* | = | 7.62 |
| Z 1) | = | 7.92 |

**Grooves**

| | | | |
|---|---|---|---|
| b | = | 3.81 | |
| N | = | 4 | |
| u | = | 240.00 | |
| Q | = | 47.99 | mm² |

Dimensions in << mm >>
Dimensions and Tolerances for Proof Barrels
see Appendix CR 1.

Notes:
1) Check for safety reasons
4) Headspace on Rim
* Basic dimensions