C.I.P.	375 Chey Tac Country of Origin: US	TAB. I Date 17-05-17 Revision

Alternative Names: 9,5 x 77

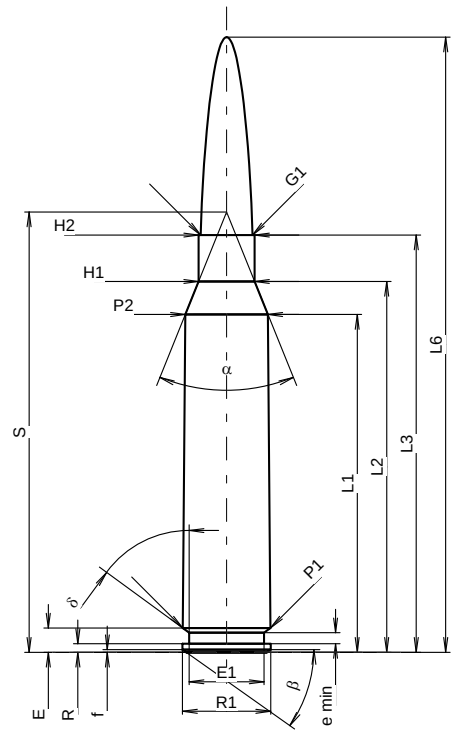

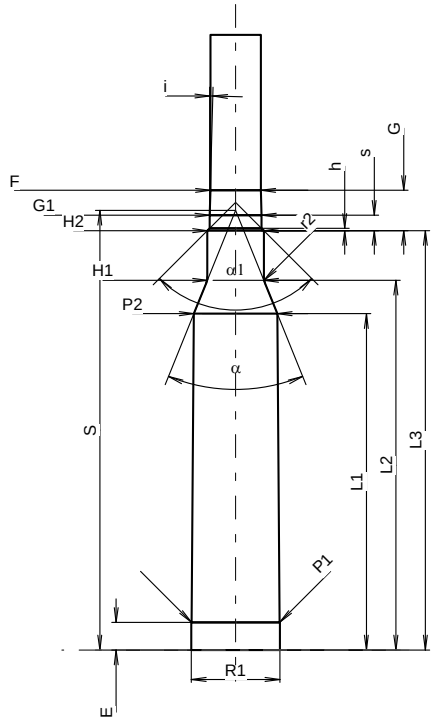

Scale 1:1.39

CARTRIDGE MAXI

Lengths

L1 1)	=	62.28	-0.20
L2 1)	=	68.37	-0.20
L3 1)	=	76.91	
L4	=		
L5	=		
L6	=	113.40	

Case Head

R	=	1.60
R1	=	16.25
R3	=	
E	=	4.47
E1	=	13.80
e min	=	2.00
δ	=	53°44'
f	=	0.50
β	=	35°19'59"

Powder Chamber

P1	=	16.18	
P2 1)*	=	15.22	-0.20

Junction Cone

α *	=	43°54'38"
S *	=	81.16
r1 min	=	
r2	=	

Collar

H1 *	=	10.31
H2 1)	=	10.31

Projectile

G1 1)	=	9.52
G2	=	
F	=	9.30
L3+G 1)	=	84.35

Pressures (Energies)
Method Transducer

Pmax	=	4400	bar
PK	=	5060	bar
PE	=	5500	bar
M	=	25.00	
EE	=	10000	Joule

Miscellaneous Dimensions

Fe 1)3)	=	0.10
delta L	=	0.09

CHAMBER MINI

Lengths

L1	=	62.01
L2	=	68.15
L3 1)	=	77.30

Breech

R	=	
R1	=	16.30
R2	=	
R3	=	
r	=	

Powder Chamber

E	=	5.08
P1 1)	=	16.23
P2 *	=	15.37

Junction Cone

α 1)*	=	43°59'18"
S *	=	81.04
r1 max	=	
r2	=	3.05

Collar

H1 *	=	10.41
H2 1)	=	10.40

Commencement of Rifling

G1 1)*	=	9.54
G 1)	=	7.44
α1	=	90°
h	=	0.43
s *	=	2.86
i 1)*	=	1°30'
w	=	

Barrel

F 1)*	=	9.30
Z 1)*	=	9.53

Grooves

b	=	2.57	
N	=	8	
u	=	330.20	
Q	=	70.32	mm²

Dimensions in << mm >>
Dimensions and Tolerances for Proof Barrels
see Appendix CR1.

Notes:
1) Check for safety reasons
3) Headspace on Shoulder
* Basic dimensions